ASI Global Partitions

INSTALLATION INSTRUCTIONS

PLASTIC LAMINATE PARTITIONS

Date Issued 07-25

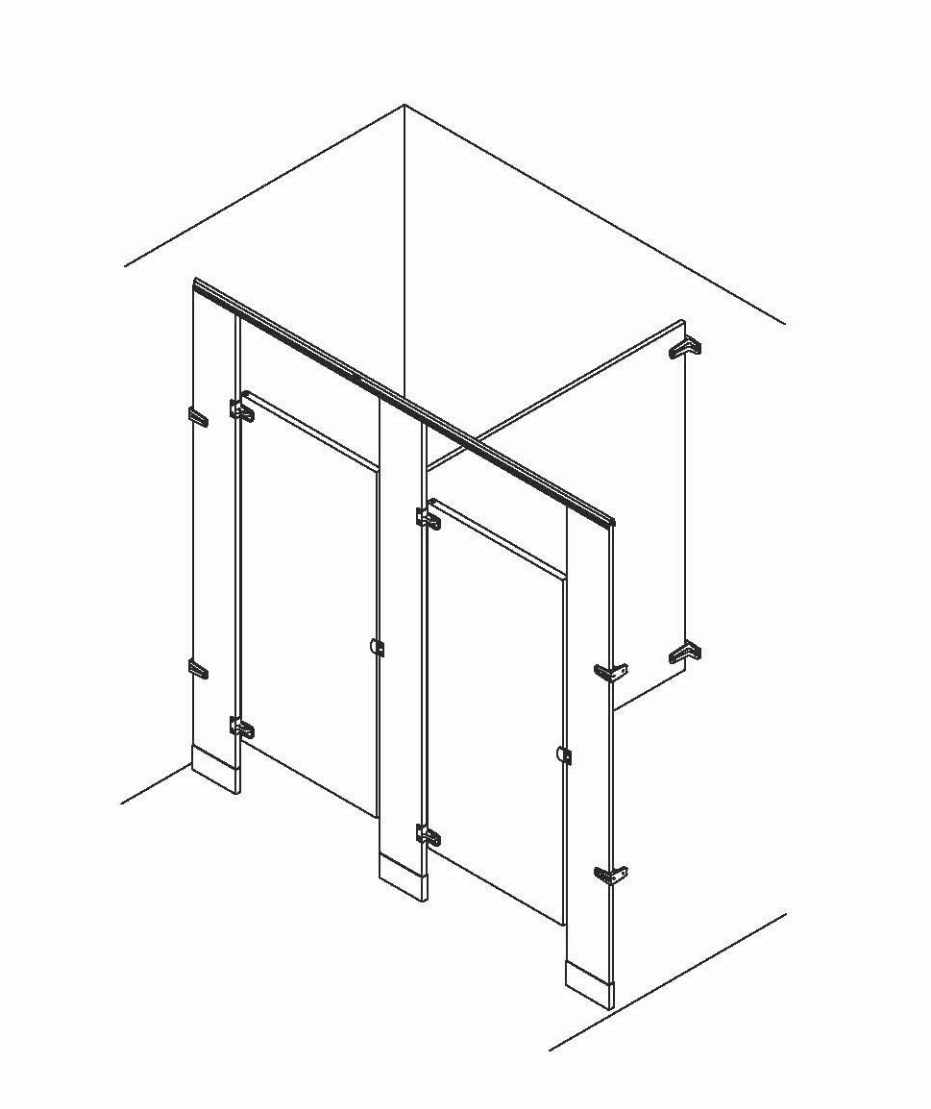

900 Clary Connector, Eastanollee, GA 30538 Tel: (706) 827-2700/ Fax (706) 827-2710 www.asi-globalpartitions.com

Thank you for choosing Global Partitions

This installation guide was designed to cover as many variations of hardware and mounting styles as possible, while also trying to keep it light and focused.

While all materials and standard mounting selections are present, in order to cover the numerous choices of hardware, we have presented each material with it's default hardware. Therefore, while each type is covered, it will be with it's most common mounting style (i.e. continuous brackets on ceiling-hung, piano hinges on Polymer, etc).

Please read all steps in their entirety before beginning actual install, as some field conditions and hardware combinations may require alternate installation.

ASI Global Partitions

Table of Contents

Floor Anchored/Overhead Braced *Page*

Step 1,2,3..... 1

Step 3,4,5..... 2

Panel to Pilaster/Wall Two Ear Assembly..... 3

Panel to Pilaster/Wall One Ear Assembly..... 4

Pilaster/Wall One Ear Assembly..... 5

Pilaster/Panel Alcove Assembly..... 6

Pilaster/Panel Inline Assembly..... 7

Door Hardware Inswing Assembly..... 8

Door Hardware Outswing Assembly..... 9

Headrail Assembly..... 10

Urinal Screen Assembly..... 11

Floor Anchored

Step 1,2,3..... 12

Step 3,4,5..... 13

Panel to Pilaster/Wall Two Ear Assembly..... 14

Panel to Pilaster/Wall One Ear Assembly..... 15

Pilaster/Wall One Ear Assembly..... 16

Pilaster/Panel Alcove Assembly..... 17

Ceiling Anchored

Step 1,2,3..... 18

Step 3,4,5..... 19

Panel to Pilaster/Wall Two Ear Assembly..... 20

Panel to Pilaster/Wall One Ear Assembly..... 21

Pilaster/Wall One Ear Assembly..... 22

Pilaster/Panel Alcove Assembly..... 23

ASI Global Partitions

Table of Contents

Floor Anchored and Ceiling Anchored — *Page*

Step 1,2,3..... 24

Step 3,4,5..... 25

Panel to Pilaster/Wall Two Ear Assembly..... 26

Panel to Pilaster/Wall One Ear Assembly..... 27

Pilaster/Wall One Ear Assembly..... 28

Pilaster/Panel Alcove Assembly..... 29

"H" & Flat Alcove Bracket Assembly — *Page*

Panel to Pilaster/Wall One Ear Assembly..... 30

Cammed & Piano Hinge Kit Assembly — *Page*

Piano Hinge Assembly..... 31

Cammed Piano Hinge Assembly..... 32

Continuous Bracket Kits — *Page*

Panel to Pilaster/Wall Assembly..... 33

Pilaster/Wall Assembly..... 34

Product Information

Care and Maintenance of Toilet Partitions..... 35

The Components for this project have been custom fabricated. They are guranteed with respect to manufacture and workmanship and were inspected at the factory.

Before beginning work, the units should be inspected. If damage occurred in transit, report immedicately to the freight company or other agencies that may have caused the damage.

STEP 1
LAYOUT
FLOOR ANCHORED/OVERHEAD BRACED

NOTE:FLOOR MUST BE CONCRETE

A. Review the layout drawings and package lists that have accompanied this job.

B. Before proceeding,confirm that backing of walls and floor is adequate to support secure mounting of the toilet compartment units.

C. Establish and mark pilaster center line from back wall.

D. Establish and mark panel center lines for wall brackets.

E. Establish pilaster floor fastener locations from side wall according to shop drawings. (Note: floor fasteners are located 3/4" from edge of pilaster).

F. Mark wall bracket holes using brackets as templates.

FIGURE 1

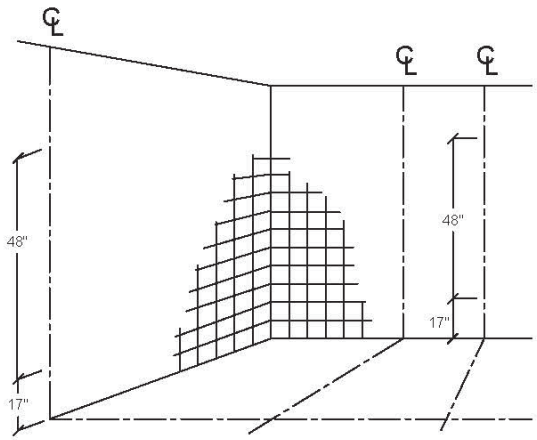

STEP 2
WALL BRACKETS AND FLOOR ANCHORS

A. Drill holes for wall brackets and floor anchors of appropriate size for particular fastening devices supplied. Typically, 1/4" bit for walls, 1/4" bit for compartment thru-bolts, and 3/16" bit for floors. (Note: as site conditions and hardware combinations vary, an assortment of bit sizes is recommended).

B. Insert anchoring devices in walls and secure wall brackets.

C. Attach the shoes to the concrete floor using the 1/4" concrete screws. (Note: the hole in the side of the shoe should be placed on the inside of the compartment).

D. Adjust the location of the shoes acording to the door opening size, and secure shoes to the floor.

FIGURE 2

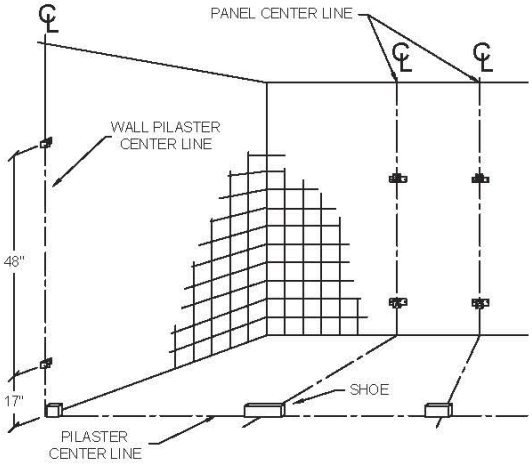

STEP 3
POSITION PANEL

A. Place panel on a support, 12" above the floor.

B. Set it into wall brackets,but do not fasten panel at this time.

FIGURE 3

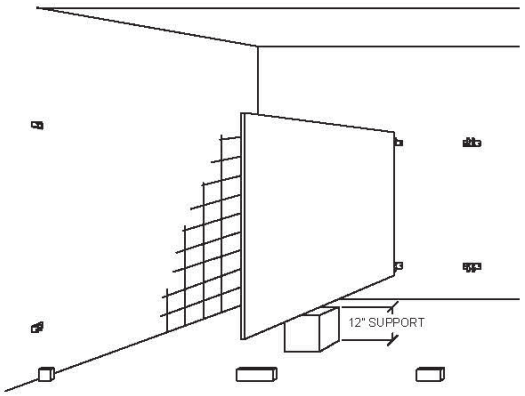

STEP 4
PILASTER PREPARATION

A. Align U-brackets in position on rear of pilasters. Refer to layout drawings and make sure brackets are in alignment with wall brackets.

B. Fasten U-brackets to pilaster with sheet metal screws.

C. Pilasters at wall will not have U-brackets, but should be prepared for wall and floor fastening as required by compartment layout.

FIGURE 4

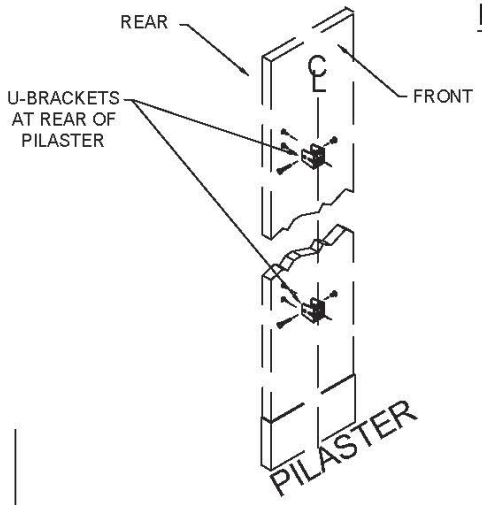

STEP 5
INSTALL PILASTERS

A. Insert the leveling bolt into the threaded insert at the bottom of the pilaster.

B. Insert the pilaster into the shoe.

C. Level the top of all pilasters by adjusting the leveling bolt to desired position.

Note: To determine how far to insert the leveling bolt, find the highest point on the floor, and fully insert the bolt on the pilaster that will be mounted in that location. Adjust all other leveling bolts accordingly.

FIGURE 5

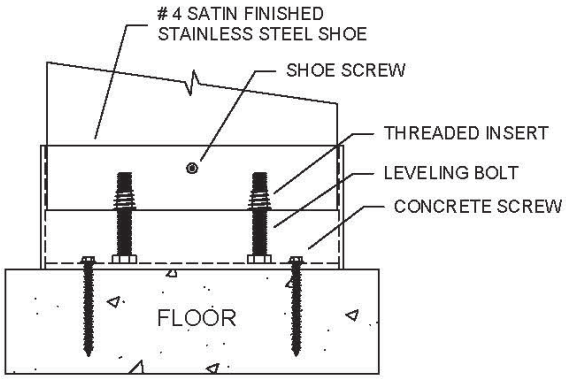

FLOOR MOUNTING DETAIL

STEP 6
SECURING PILASTERS/PANELS

A. Level the panel and adjust the gaps at either end.

B. Secure the panel to the wall and pilaster using through-bolts.

C. Remove panel support device.

D. Plumb each pilaster and secure with headrail (see page 10 for headrail detail).

E. Secure the pilaster to the shoe using shoe screws.

FIGURE 6

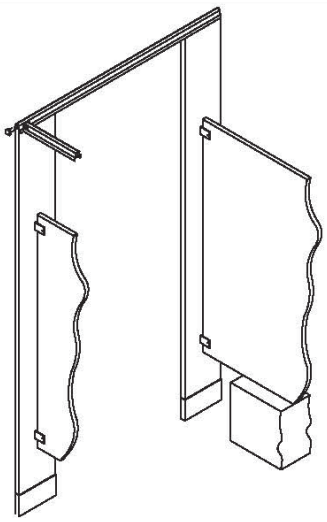

FLOOR ANCHORED/OVERHEAD BRACED
PANEL TO PILASTER/WALL
TWO EAR ASSEMBLY

Pilasters must be both plumb and level. To assist in leveling, headrail may be lightly positioned across adjacent pilasters(do not fasten at this time) Refer to steps 4 & 6.

A. Fasten panel to 2-ear bracket at wall with through bolts.

B. Plumb pilaster and fasten pilaster to panel using through bolts or sheet metal screws to "U" brackets.

Panel Hardware Kit (P/N 8515020) Includes: CHROME PLATED ZAMAC			
Panel Hardware Kit (P/N 8265021) Includes: STAINLESS STEEL			
PART ID.		DESCRIPTION	QTY
1		Two Ear Bracket	(2)
2		"U" Bracket	(2)
3		Vandal Resistant Step Bolts 1" Long	(4)
4		Vandal Resistant Barrel Nut	(4)
5		Vandal Resistant 2 1/2" S.M.S	(4)
6		Plastic Shields	(4)
7		Vandal Resistant 5/8" S.M.S	(4)

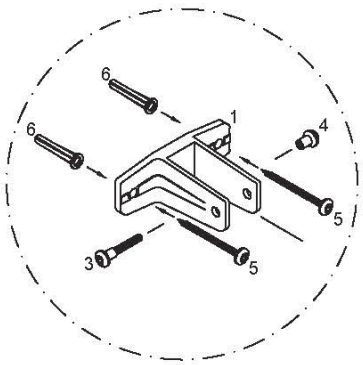

FIGURE A

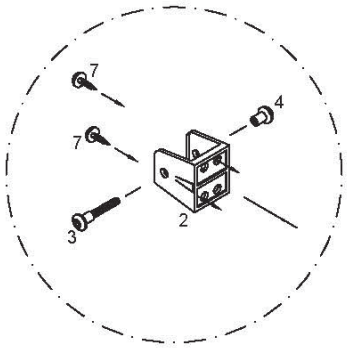

NOTE:
Use Only TwoTheft resistant 5/8" SMS
To Diagonally Fasten U-bracket To Pilaster.

FIGURE B

FLOORANCHORED/OVERHEAD BRACED
PANEL TO PILASTER/WALL
ONE EAR ASSEMBLY

Pilasters must be both plumb and level. To assist in leveling, headrail may be lightly positioned across adjacent pilasters(do not fasten at this time) Refer to steps 4 & 6.

A. Fasten panel to 1-ear bracket at wall with through bolts.

B. Plumb pilaster and fasten pilaster to panel using through bolts or sheet metal screws to "U" brackets.

Panel Hardware Kit (P/N 8515010) Includes: CHROME PLATED ZAMAC			
Panel Hardware Kit (P/N 8265011) Includes: STAINLESS STEEL			
PART ID.		DESCRIPTION	QTY
1		One Ear Bracket	(2)
2		"U" Bracket	(2)
3		Vandal Resistant Step Bolts 1" Long	(4)
4		Vandal Resistant Barrel Nut	(4)
5		Vandal Resistant 2 1/2" S.M.S	(4)
6		Plastic Shields	(4)
7		Vandal Resistant 5/8" S.M.S	(12)

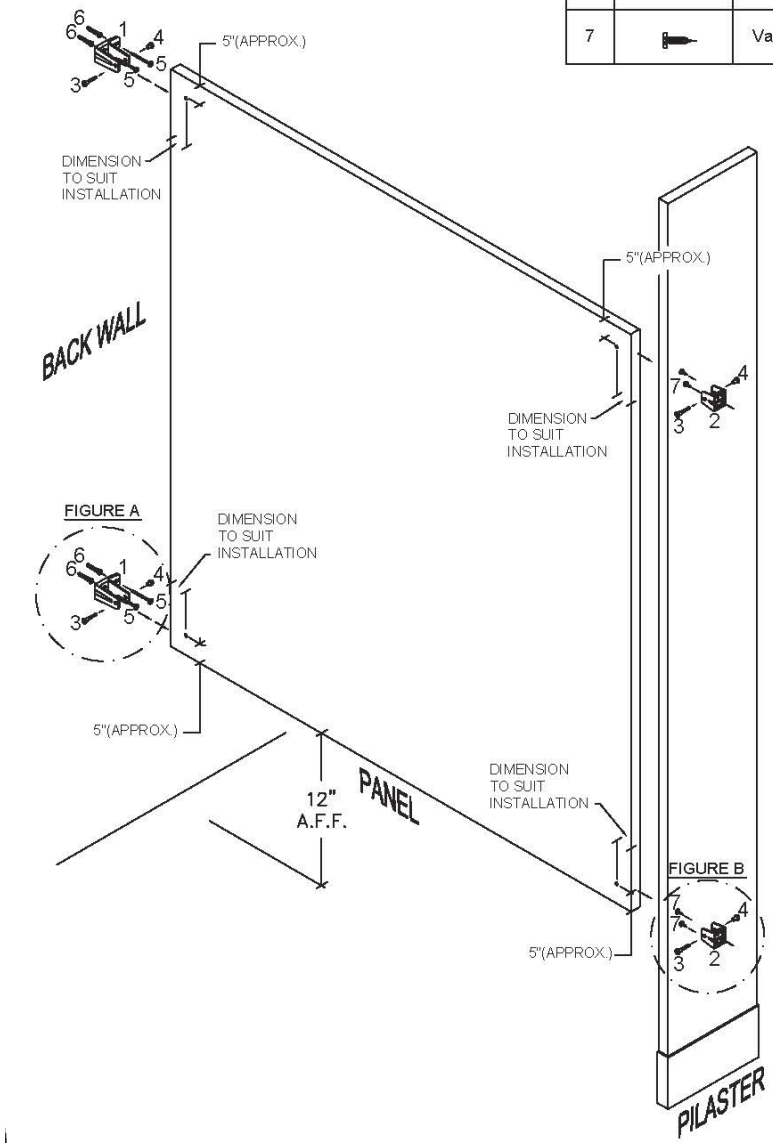

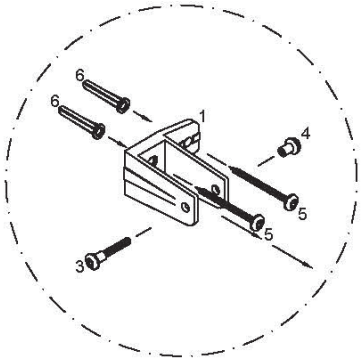

FIGURE A

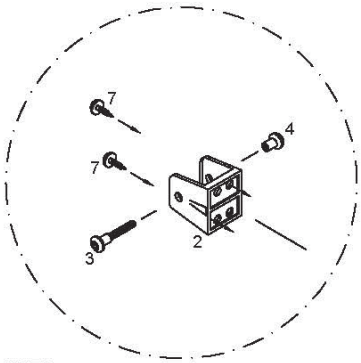

NOTE:
Use Only Two Vandal resistant 5/8" SMS To Diagonally Fasten U-bracket To Pilaster.

FIGURE B

FLOOR ANCHORED/OVERHEAD BRACED
PILASTER/WALL
ASSEMBLY
PLASTIC LAMINATE

Pilasters must be both plumb and level. To assist in leveling, headrail may be lightly positioned across adjacent pilasters(do not fasten at this time)

A. Fasten pilaster to wall bracket using through bolts or sheet metal screws.

B. Establish door openings by adjusting pilaster mounting bar to desired position and tighten nuts. Refer to step 6.

Pilaster/Wall Hardware Kit (P/N 8515210) Includes: CHROME PLATED ZAMAC			
Pilaster/Wall Hardware Kit (P/N 8265211) Includes: STAINLESS STEEL			
PART ID.		DESCRIPTION	QTY
1		One Ear Wall Bracket	(2)
2		Vandal Resistant Step Bolts 1 1/4" Long	(2)
3		Vandal Resistant Barrel Nut	(2)
4		Vandal Resistant 2 1/2" S.M.S	(4)
5		Plastic Shields	(4)
6		Vandal Resistant 5/8" S.M.S	(4)

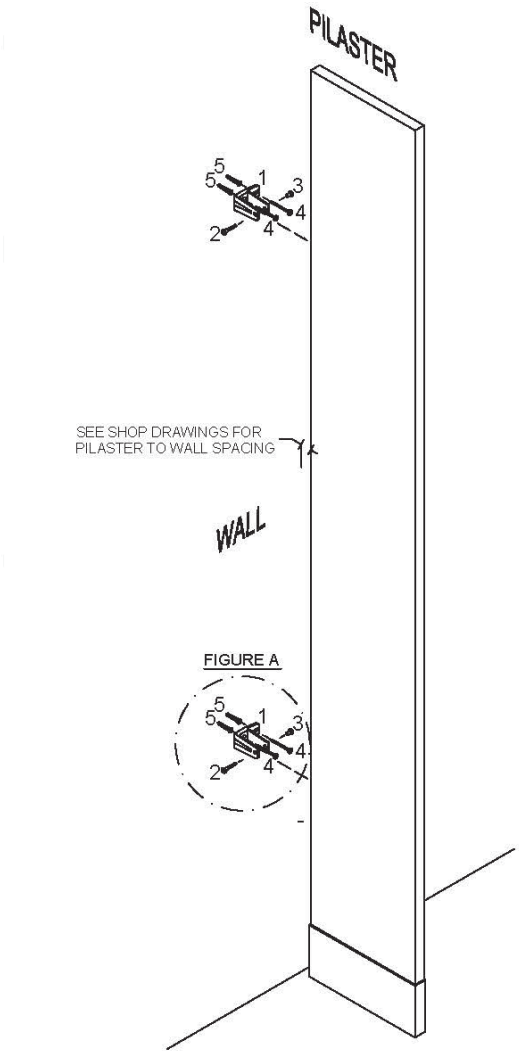

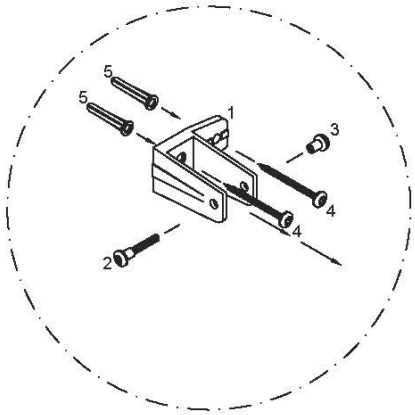

FIGURE A

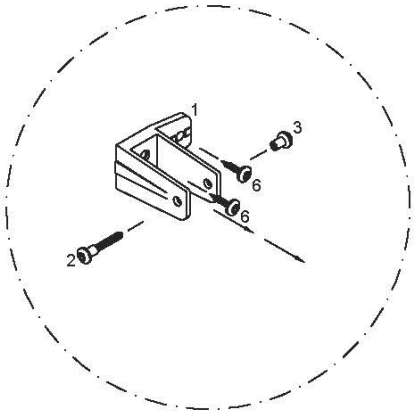

NOTE:
Replace Vandal Resistant 2 1/2"
With Vandal Resistant 5/8"
To Fasten Pilaster To Panel.

FIGURE B

FLOORANCHORED/ OVERHEAD BRACED PILASTER/PANEL ALCOVE ASSEMBLY ONE EAR PLASTIC LAMINATE

Replace #8517310 with #8517320 for two ear bracket kit.

Alcove Hardware Kit (P/N 8517310) Includes: CHROME PLATED ZAMAC Alcove Hardware Kit (P/N 8267311) Includes: STAINLESS STEEL			
PART ID.		DESCRIPTION	QTY
1		1 1/4" One Ear Wall Bracket	(2)
2		Vandal Resistant Step Bolts1 1/4" Long	(2)
3		Vandal Resistant Barrel Nut	(4)
4		Vandal Resistant 2 1/2" S.M.S	(10)
5		Plastic Shields	(10)
6		Vandal Resistant 5/8" S.M.S (Balance For Fasting Pilaster /Panel)	(14)
7		Alcove Clip	(2)
8		1" One Ear Wall Bracket	(2)
9		Vandal Resistant 1" S.M.S	(4)
10		Vandal Resistant C/P Step Bolts 1" Long	(2)
11		Bracket Headrail Satin "F" Zamac	(1)

FIGURE A

FLOOR ANCHORED/
OVERHEAD BRACED
PILASTER/PANEL/PILASTER INLINE
ASSEMBLY
PLASTIC LAMINATE

Alternate Alcove Hardware Kit (P/N 8517030) Includes: CHROME PLATED ZAMAC			
PART ID.		DESCRIPTION	QTY
1		Alcove Clips	(12)
2		Vandal Resistant Step Bolts 1" Long	(12)
3		Vandal Resistant Barrel Nut	(12)
4		VandalResistant 5/8" S.M.S	(24)

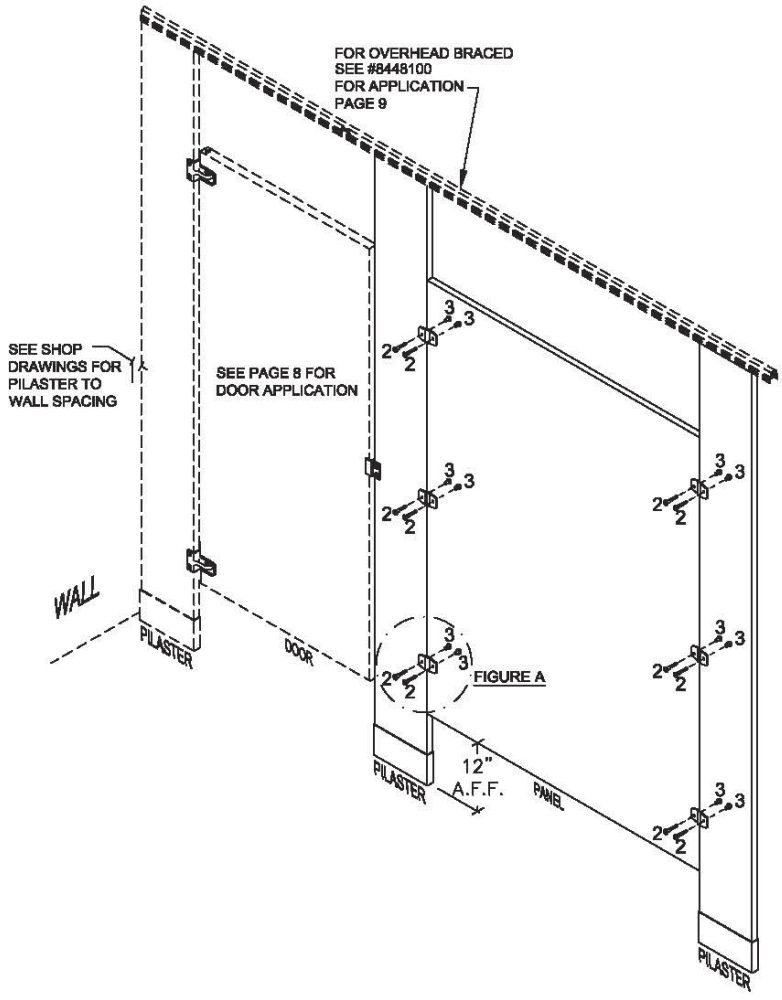

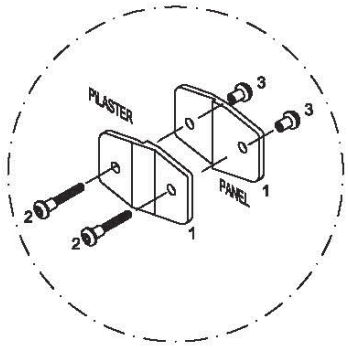

FIGURE A
RECOMMENDED

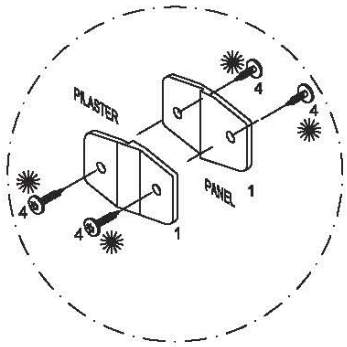

OPTIONAL

✹ Two Vandal Resistant 5/8"SMS
May be Used (But Not Recommended)
To Fasten brackets To Panel. Offset brackets
for screw clearance.

DOOR HARDWARE ASSEMBLY PLASTIC LAMINATE

A. Insert a top nylon cam into the upper and lower door hinge insert closure bracket, as illustrated so that cam base is flush with inner bracket surface.See figure A

B. Insert each door hinge insert (with top cam in place)into the upper and lower openings in the door, anchoring with #10 x 1" screw. See figure A

C. Insert bottom nylon cam into the pilaster portion of the hinge bracket assembly. See figure B. The cam should be set to same desired position on upper and lower hinge assemblies. See figure C.

D. Connect top and bottom hinge pilaster bracket to door & hinge. Insert with hinge pin through the top and bottom of the door until the pin is flush with the door edge.

E. With hinges in place, position door so that the upper portion of hinge bracket is on pilaster at desired height.

F. Secure top & bottom hinge pilaster bracket to pilaster with two through bolts.

G. Install balance of hardware per this diagram.

Inswing Door Hardware Kit (P/N 8512003) Includes: CHROME PLATED ZAMAC			
Inswing Door Hardware Kit (P/N 8262003) Includes: STAINLESS STEEL			
PART ID.		DESCRIPTION	QTY
1		Hinge Pilaster Bracket	(2)
2		Door hinge insert	(2)
3		Hinge Pintle Nylon	(2)
4		Hinge Cam Nylon	(2)
5		Inswing Latch Slide Keeper	(1)
6		Hinge Pin	(2)
7		Bumper And Coathook	(1)
8		Vandal Resistant SM 1" Flat Head	(2)
9		Vandal Resistant Step Bolts 1" long	(2)
10		Vandal Resistant 5/8" Barrel Nut	(7)
11		Vandal Resistant S.M.S. 5/8"	(2)
12		Slide Latch	(1)
13		Vandal Resistant Step Bolts 1 1/4" long	(5)

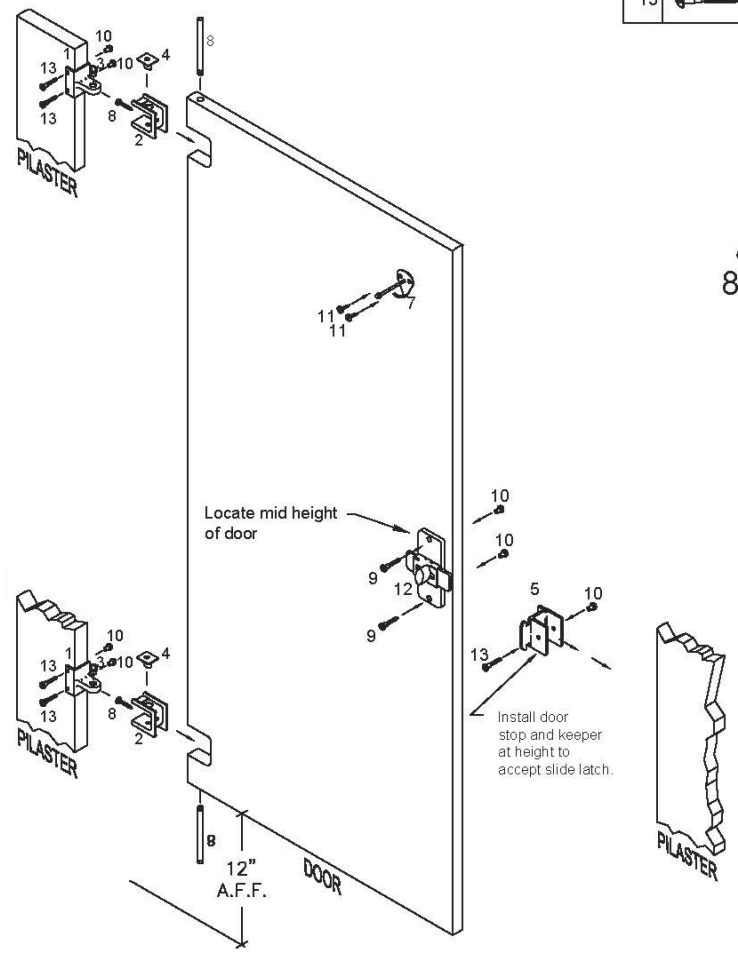

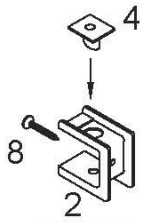

FIGURE A

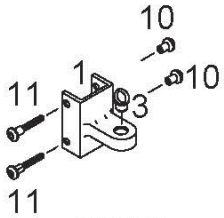

FIGURE B

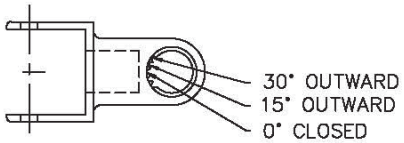

FIGURE C

DOOR HARDWARE - OUTSWING
ASSEMBLY
PLASTIC LAMINATE

A. Insert a top nylon cam into the upper and lower door hinge insert closure bracket, as illustrated so that cam base is flush with inner bracket surface.See figure A

B. Insert each door hinge insert (with top cam in place)into the upper and lower openings in the door, anchoring with #10 x 1" screw. See figure A

C. Insert bottom nylon cam into the pilaster portion of the hinge bracket assembly. See figure B. The cam should be set to same desired position on upper and lower hinge assemblies. See figure C.

D. Connect top and bottom hinge pilaster bracket to door & hinge. Insert with hinge pin through the top and bottom of the door until the pin is flush with the door edge.

E. With hinges in place, position door so that the upper portion of hinge bracket is on pilaster at desired height.

F. Secure top & bottom hinge pilaster bracket to pilaster with two through bolts.

G. Install balance of hardware per this diagram.

Outswing Door Hardware Kit (P/N 8512004) Includes: CHROME PLATED ZAMAC			
PART ID.		DESCRIPTION	QTY
1		Hinge Pilaster Bracket	(2)
2		Door hinge insert	(2)
3		Hinge Pintle Nylon	(2)
4		Hinge Cam Nylon	(2)
5		Bumper	(1)
6		Pull Handle	(1)
7		Outswing Latch Slide Keeper	(1)
8		Hinge Pin	(2)
9		Bumper And Coathook	(1)
10		Vandal Resistant SM 1" Flat Head	(2)
11		Vandal Resistant Step Bolts 1 1/4" long	(5)
12		Vandal Resistant 5/8" Barrel Nut	(7)
13		Vandal Resistant S.M.S. 5/8"	(4)
14		Slide Latch	(1)
15		Vandal Resistant Step Bolts 1 1/2" long	(2)

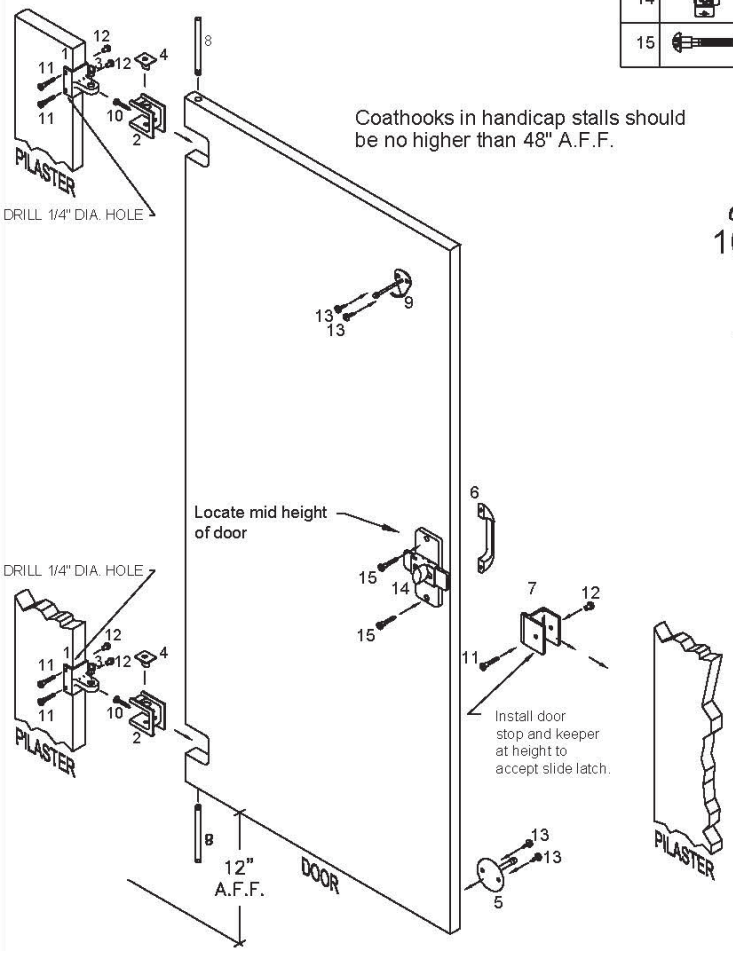

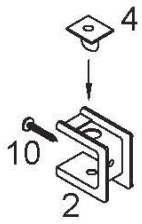

FIGURE A

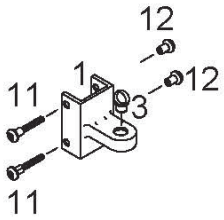

FIGURE B

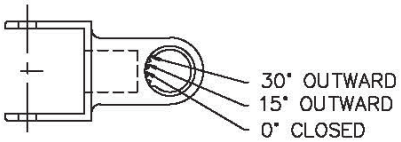

FIGURE C

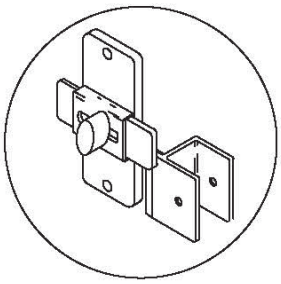
Install slide latch so that slide bar, when completely engaged, does not rest behind pilaster. It should also be high enough to allow "lift-up" emergency access.

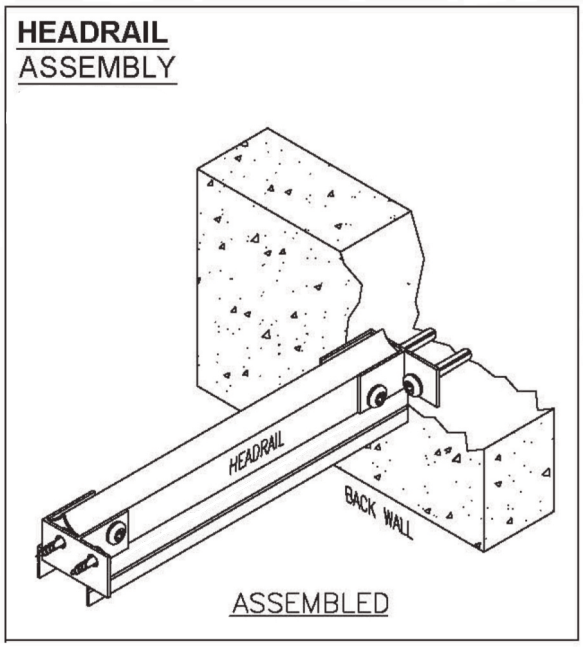

Headrail Hardware Kit Includes:		
PART ID.	**DESCRIPTION**	**QTY**
	Headrail Satin "F" Zamac Bracket	(2)
	Headrail Cap Satin Zamac	(1)
	Vandal Resistant 2 1/2" S.M.S	(2)
	Plastic Shield 14/16 x 1-1/2"	(2)
	Vandal Resistant 5/8" S.M.S	(2)

	Theft Resistant #10 x 5/8" S.M.S	(X)

To attach headrail to the pilaster.
Additional Vandal Resistant 5/8" S.M.S
will be included based upon headrail length.

(Note a 1/8" drill bit will need to be used for predrilling.)

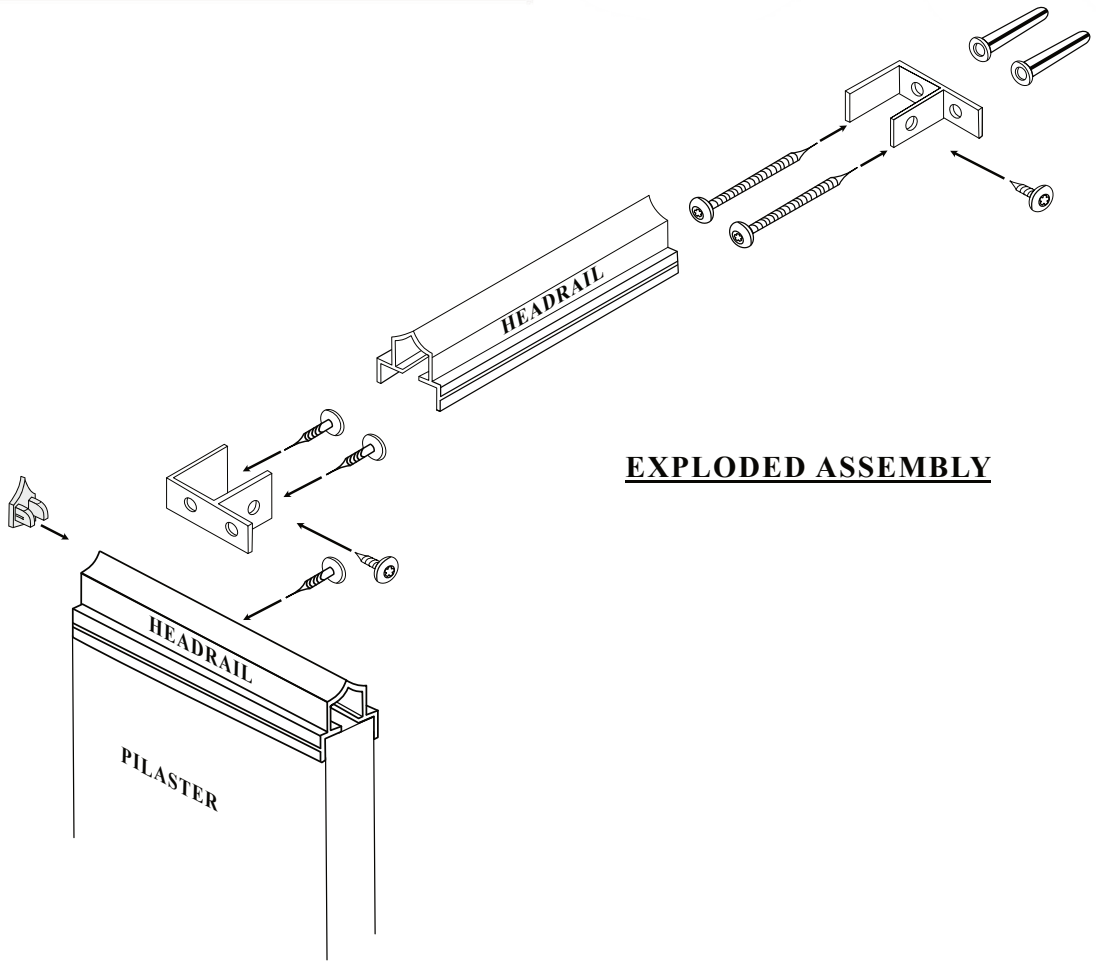

EXPLODED ASSEMBLY

URINAL SCREEN ASSEMBLY PLASTIC LAMINATE

A. Before proceeding,confirm that backing of wall is adequate to support and secure mounting of urinal screens.Check dwgs for layout.

B. Insert anchoring devices in walls and secure wall brackets with 2½" S.M.S.

C. Place urinal screen on a support, 12" above the floor.

D. Set U/S into wall brackets and fasten with recommended fasteners.

Urinal Screen Hardware Kit (P/N 8511281) Includes: CHROME PLATED ZAMAC			
Urinal Screen Hardware Kit (P/N 8261281) Includes: STAINLESS STEEL			
PART ID.		DESCRIPTION	QTY
1		Two Ear Wall U/S Bracket	(2)
2		Vandal Resistant 2 1/2" S.M.S	(4)
3		Plastic Shields	(4)
4		Vandal Resistant 5/8" S.M.S	(8)

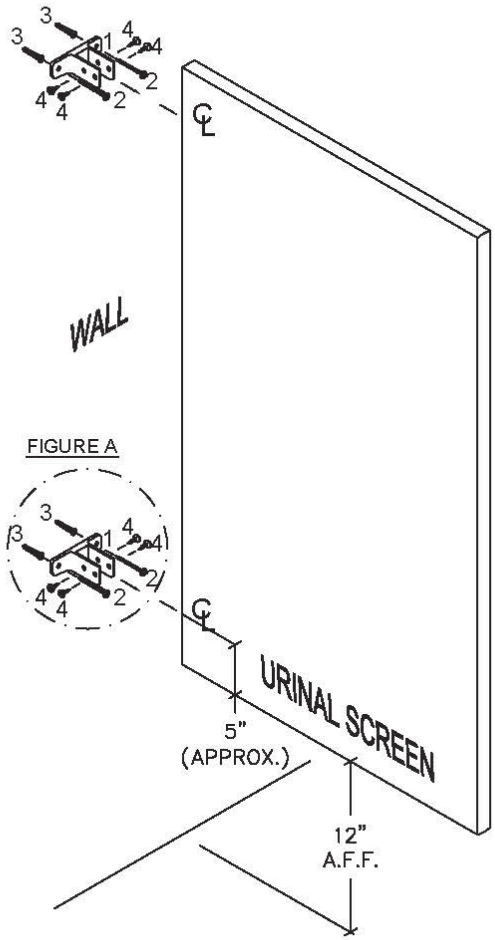

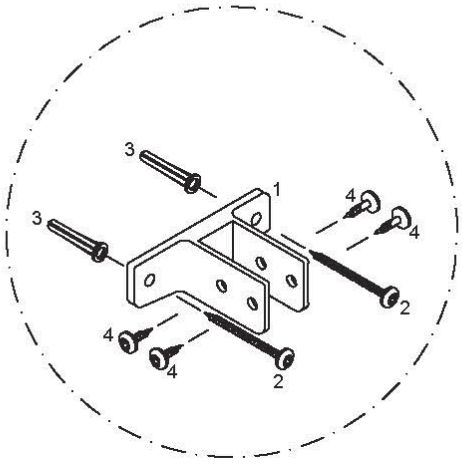

FIGURE A

STEP 1
LAYOUT
FLOOR ANCHORED

NOTE: FLOOR MUST BE CONCRETE.

A. Review the layout drawings and package lists that have accompanied this job.

B. Before proceeding,confirm that backing of walls and floor is adequate to support secure mounting of the toilet compartment units.

C. Establish and mark pilaster center line from back wall.

D. Establish and mark panel center lines for wall brackets.

E. Establish pilaster floor fastener locations from side wall according to shop drawings. (Note floor fasteners are located roughly 3/4" from edge of pilaster.)

F. Mark wall bracket holes using brackets as templates.

FIGURE 1

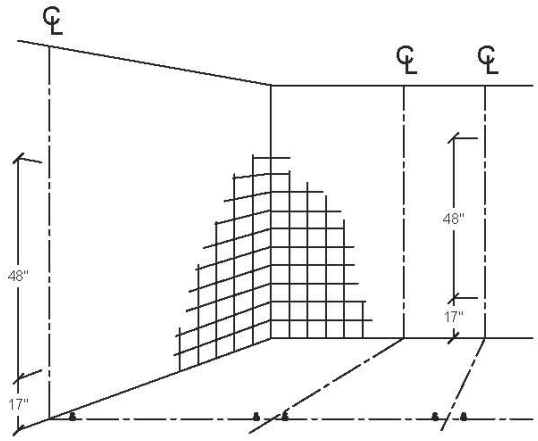

STEP 2
WALL BRACKETS AND FLOOR BRACKETS

A. Drill holes for wall brackets and floor fastenings of appropriate size for particular fastening devices supplied. Typically 1/4" bits can be used for walls and compartment thru-bolts and 3/8" bits for floors. A variety of bit sizes are recommended as site conditions and hardware combinations vary.

B. Insert anchoring devices in walls and secure wall brackets.

C. Install wedge anchor with washer and nut into concrete floor and tighten.

FIGURE 2

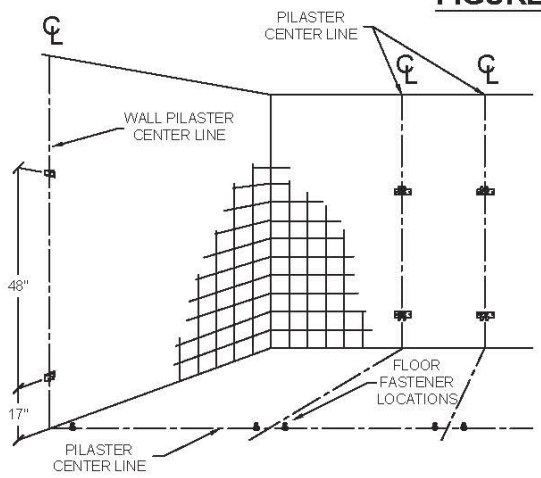

STEP 3
POSITION PANEL

A. Place panel on a support, 12" above the floor.

B. Set it into wall brackets,but do not fasten panel at this time.

FIGURE 3

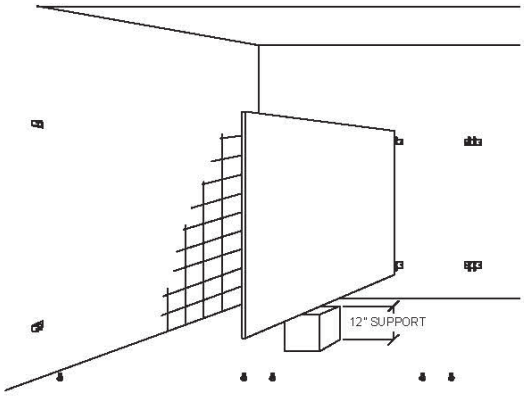

STEP 4
PILASTER PREPARATION FLOOR ANCHORED

A. Align "U"-brackets in position on rear of pilasters.Refer to layout drawings.

B. Fasten "U"-brackets to pilaster with sheet metal screws.

C. Pilasters at wall do not require U-brackets,but should be prepared for wall and floor fastening as required by compartment layout.

FIGURE 4

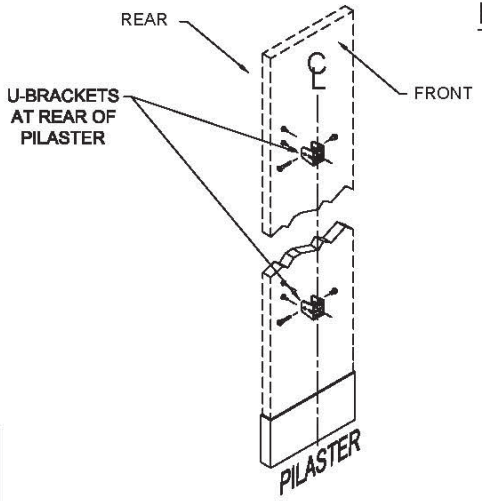

STEP 5
INSTALL PILASTERS

A. On each wedge anchor thread place one 3/8" support nut down to approximately 1" up from floor level and place round washer over each anchor.

B. Slide stainless steel shoe carefully over mounting end of pilaster and leave approximately 5" above end.

C. Position pilaster on anchors and secure lightly with flat washers and 3/8" locking nuts.

FIGURE 5

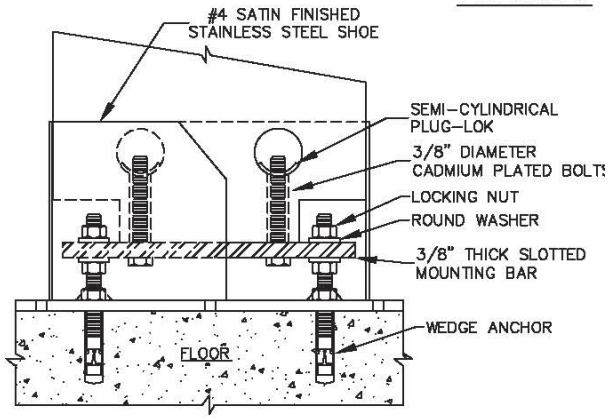

FLOOR MOUNTING DETAIL

STEP 6
SECURING PILASTERS /PANELS

A. Level each pilaster by adjusting both support nuts to desired position.

B. Plumb each pilaster and fasten the pilaster to panel with "U" brackets using through bolts or sheet metal screws.

C. Establish door openings by setting pilaster mounting bar to desired position on anchor.

D. Tighten locking nuts on top of pilaster mounting bar.

E. Slide stainless steel shoe down to floor.

F. Fasten panel to wall brackets using through bolts.

G. Remove panel support device.

FIGURE 6

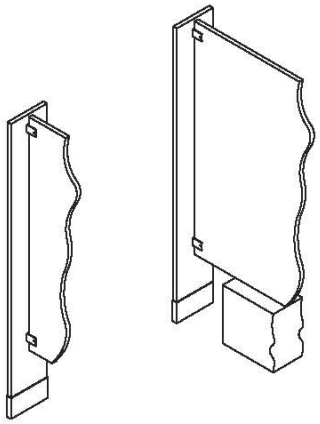

FLOOR ANCHORED
PANEL TO PILASTER/WALL
TWO EAR ASSEMBLY

Pilasters must be both plumb and level. To assist in leveling, headrail may be lightly positioned across adjacent pilasters (do not fasten at this time) Refer to steps 4 & 6.

A. Fasten panel to 2-ear bracket at wall with through bolts.

B. Plumb pilaster and fasten pilaster to panel using through bolts or sheet metal screws to "U" brackets.

Panel Hardware Kit (P/N 8515020) Includes: CHROME PLATED ZAMAC Panel Hardware Kit (P/N 8265021) Includes: STAINLESS STEEL			
PART ID.		DESCRIPTION	QTY
1		Two Ear Bracket	(2)
2		"U" Bracket	(2)
3		Vandal Resistant Step Bolts 1" Long	(4)
4		Vandal Resistant Barrel Nut	(4)
5		Vandal Resistant 2 1/2" S.M.S	(4)
6		Plastic Shields	(4)
7		Vandal Resistant 5/8" S.M.S	(4)

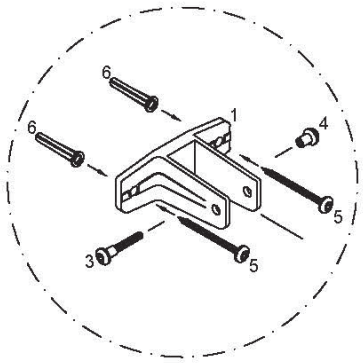

FIGURE A

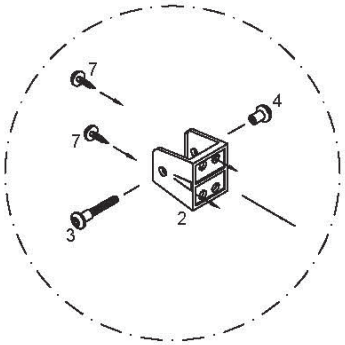

NOTE:
Use Only TwoTheft resistant 5/8" SMS
To Diagonally Fasten U-bracket To Pilaster.

FIGURE B

FLOORANCHOREDPANEL TO PILASTER/WALL ONE EAR ASSEMBLY

Pilasters must be both plumb and level. To assist in leveling, headrail may be lightly positioned across adjacent pilasters(do not fasten at this time) Refer to steps 4 & 6.

A. Fasten panel to 1-ear bracket at wall with through bolts.

B. Plumb pilaster and fasten pilaster to panel using through bolts or sheet metal screws to "U" brackets.

Panel Hardware Kit (P/N 8515010) Includes: CHROME PLATED ZAMAC			
Panel Hardware Kit (P/N 8265011) Includes: STAINLESS STEEL			
PART ID.		DESCRIPTION	QTY
1		One Ear Bracket	(2)
2		"U" Bracket	(2)
3		Vandal Resistant Step Bolts 1" Long	(4)
4		Vandal Resistant Barrel Nut	(4)
5		Vandal Resistant 2 1/2" S.M.S	(4)
6		Plastic Shields	(4)
7		Vandal Resistant 5/8" S.M.S	(12)

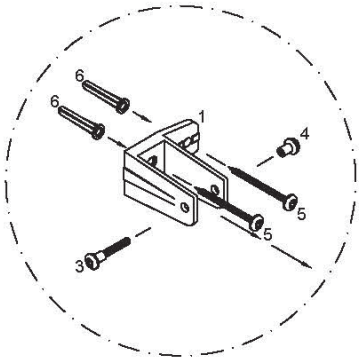

FIGURE A

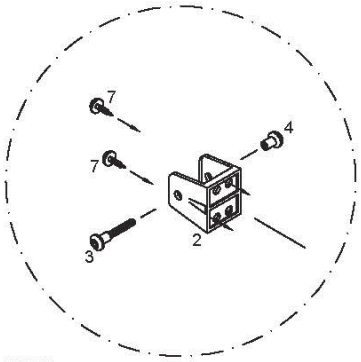

NOTE:
Use Only Two Vandal resistant 5/8" SMS To Diagonally Fasten U-bracket To Pilaster.

FIGURE B

FLOOR ANCHORED PILASTER/WALL ASSEMBLY PLASTIC LAMINATE

Pilasters must be both plumb and level. To assist in leveling, headrail may be lightly positioned across adjacent pilasters(do not fasten at this time)

A. Fasten pilaster to wall bracket using through bolts or sheet metal screws.

B. Establish door openings by adjusting pilaster mounting bar to desired position and tighten nuts. Refer to step 6.

Pilaster/Wall Hardware Kit (P/N 8515210) Includes: CHROME PLATED ZAMAC			
Pilaster/Wall Hardware Kit (P/N 8265211) Includes: STAINLESS STEEL			
PART ID.		DESCRIPTION	QTY
1	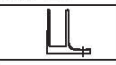	One Ear Wall Bracket	(2)
2		Vandal Resistant Step Bolts 1 1/4" Long	(2)
3		Vandal Resistant Barrel Nut	(2)
4		Vandal Resistant 2 1/2" S.M.S	(4)
5		Plastic Shields	(4)
6		Vandal Resistant 5/8" S.M.S	(4)

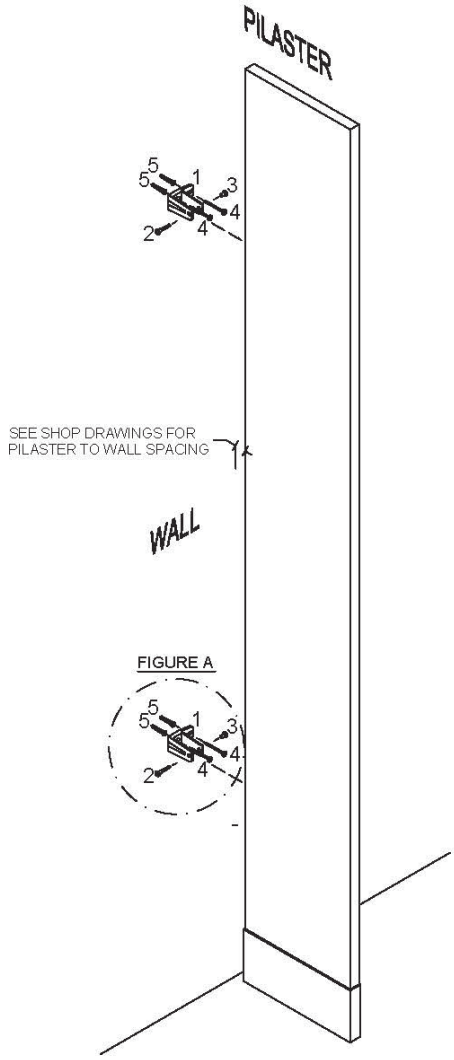

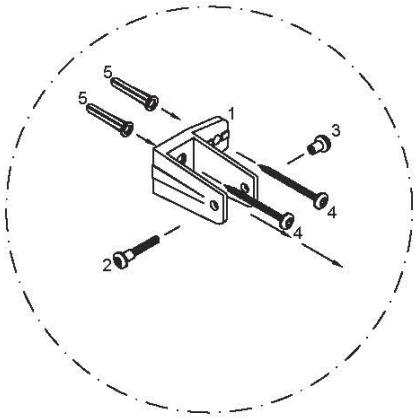

FIGURE A

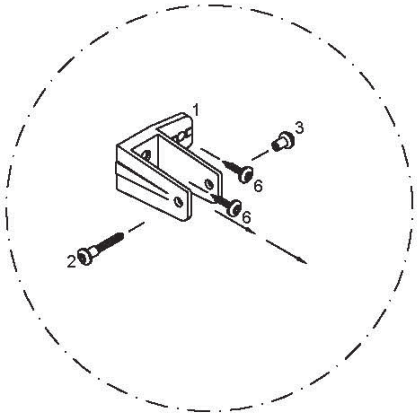

NOTE:
Replace Vandal Resistant 2 1/2"
With Vandal Resistant 5/8"
To Fasten Pilaster To Panel.

FIGURE B

FLOOR ANCHORED
PILASTER/PANEL ALCOVE ASSEMBLY
PLASTIC LAMINATE

Note:
Replace P/N#8515010 with P/N#8515020 for two ear locations.

Replace P/N#8265011 with P/N#2615021 for two ear STAINLESS STEEL locations.

Combine with pilaster to wall kit 8515210

Panel Hardware Kit (P/N 8515010) Includes: CHROME PLATED ZAMAC Panel Hardware Kit (P/N 8265011) Includes: STAINLESS STEEL			
PART ID.		DESCRIPTION	QTY
1		One Ear Bracket	(2)
2		"U" Bracket	(2)
3		Vandal Resistant C/P Step Bolts 1" Long	(4)
4		Vandal Resistant C/P Barrel Nut	(4)
5		Vandal Resistant 2 1/2" S.M.S	(4)
6		Plastic Shields	(4)
7		Vandal Resistant 5/8" S.M.S	(12)

FIGURE A

NOTE:
Replace Vandal Resistant 2 1/2" SMS
With Vandal resistant 5/8" SMS
To Fasten Pilaster To Panel.

STEP 1
LAYOUT
CEILING HUNG

A. Review the layout drawings and package lists that have accompanied this job.

B. Before proceeding, confirm that backing of wall and ceiling is adequate to support secure mounting of toilet compartment units.

C. Confirm correct location and condition of threaded ceiling rods. These should project 2" to 2-1/2" below finished ceiling.

D. Establish and mark pilaster and panel center lines in relation to ceiling rod locations and drawings.

E. Mark wall bracket holes using brackets as templates.

FIGURE 1

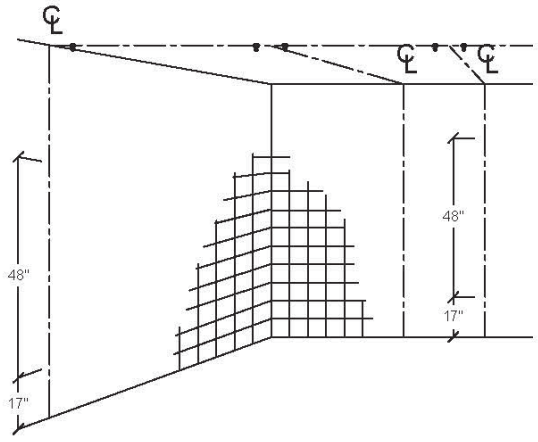

STEP 2
WALL BRACKETS

A. Drill holes for wall brackets and floor fastenings of appropriate size for particular fastening devices supplied. Typically 1/4" bits can be used throughout. A wide variety of bit sizes are recommended as site conditions and hardware combinations vary.

B. Insert anchoring devices in walls and secure wall brackets.

C. Pilaster at wall should be prepared for wall and ceiling fastening as required by compartment layout.

FIGURE 2

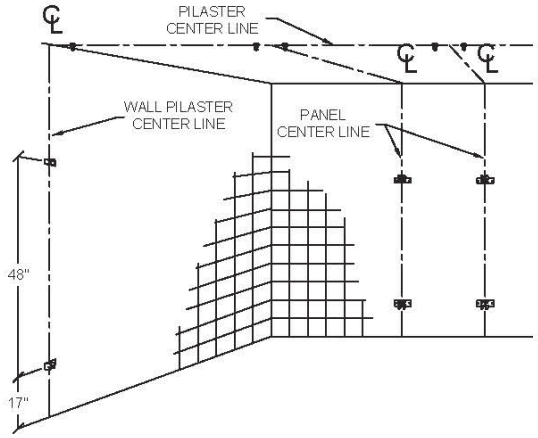

STEP 3
POSITION PANEL

A. Place panel on a support, 12" above the floor.

B. Set it into wall brackets,but do not fasten panel at this time.

FIGURE 3

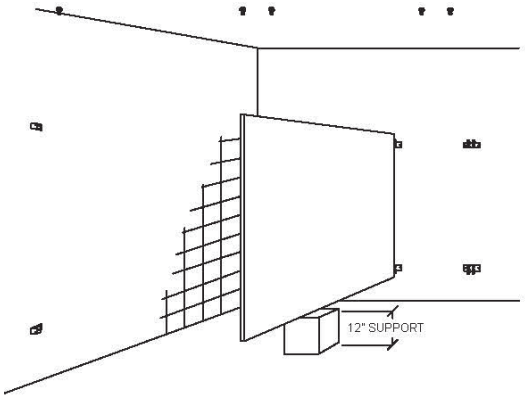

STEP 4
PILASTER PREPARATION

A. Align U-brackets in position on rear of pilasters.Refer to layout drawings.

B. Fasten U-brackets to pilaster with sheet metal screws.

C. Pilasters at wall do not require U-brackets.

FIGURE 4

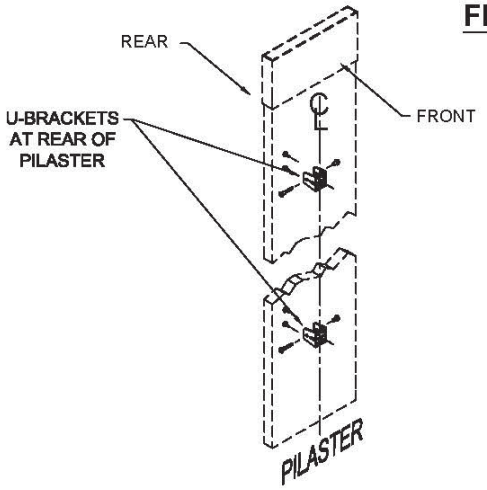

STEP 5
INSTALL PILASTERS

NOTE:STRUCTURAL STEEL BY OTHERS

A. Place thread support nuts and mounting washers over threaded rods to support pilaster mounting bar.

B. Position pilaster and mounting bar on threaded rods and attach lightly with square flat washer, lockwasher, and locking nut.

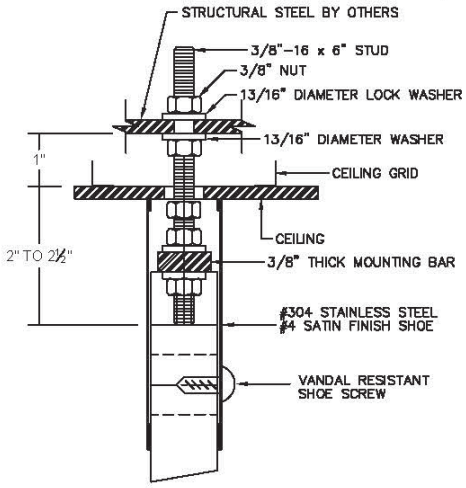

CEILING BOLT MOUNTING DETAIL

STEP 6
SECURING PILASTERS TO PANELS

FIGURE 6

A. Level each pilaster by adjusting both support nuts to desired position.

B. Plumb each pilaster and fasten the pilaster to panel using through bolts or sheet metal screws.

C. Establish door openings by setting pilaster mounting bar to desired position on stud.

D. Tighten locking nuts on top of pilaster mounting bar.

E. Slide stainless steel shoe up to ceiling,firmly engaging shoe clips.

F. Fasten panel to wall brackets using through bolts.

G.Remove panel support device.

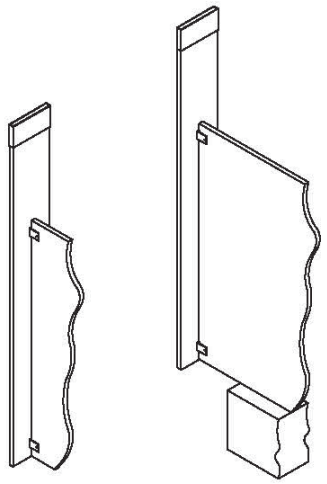

CEILING HUNG
PANEL TO PILASTER/WALL
TWO EAR ASSEMBLY
PLASTIC LAMINATE

Pilasters must be both plumb and level.
Refer to steps 4 & 6.

A. Fasten panel to 2-ear bracket at wall with through bolts.

B. Plumb pilaster and fasten pilaster to panel using through bolts or sheet metal screws to "U" brackets.

Panel Hardware Kit (P/N 8515020) Includes: CHROME PLATED ZAMAC Panel Hardware Kit (P/N 8265021) Includes: STAINLESS STEEL			
PART ID.		DESCRIPTION	QTY
1		Two Ear Bracket	(2)
2		"U" Bracket	(2)
3		Vandal Resistant Step Bolts 1" Long	(4)
4		Vandal Resistant Barrel Nut	(4)
5		Vandal Resistant 2 1/2" S.M.S	(4)
6		Plastic Shields	(4)
7		Vandal Resistant 5/8" S.M.S	(12)

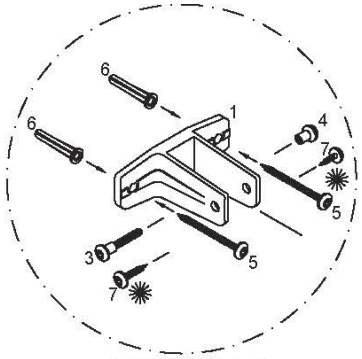

FIGURE A

✹ OPTIONAL
Two Vandal resistant 5/8" Screws
May Be Used (But Not Recommended)
To Fasten brackets To Panel.

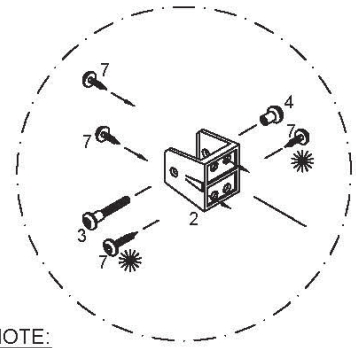

NOTE:
Use Only Two Vandal resistant
5/8" Screws
To Diagonally Fasten U-bracket To Pilaster.

FIGURE B

CEILING HUNG
PANEL TO PILASTER/WALL
ONE EAR ASSEMBLY
PLASTIC LAMINATE

Pilasters must be both plumb and level.
Refer to steps 4 & 6.

A. Fasten panel to 1-ear bracket at wall with through bolts.

B. Plumb pilaster and fasten pilaster to panel using through bolts or sheet metal screws to "U" brackets.

Panel Hardware Kit (P/N 8515010) Includes: CHROME PLATED ZAMAC Panel Hardware Kit (P/N 8265011) Includes: STAINLESS STEEL			
PART ID.		DESCRIPTION	QTY
1		One Ear Bracket	(2)
2		"U" Bracket	(2)
3		Vandal Resistant Step Bolts 1" Long	(4)
4		Vandal Resistant Barrel Nut	(4)
5		Vandal Resistant 2 1/2" S.M.S	(4)
6		Plastic Shields	(4)
7		Vandal Resistant 5/8" S.M.S	(12)

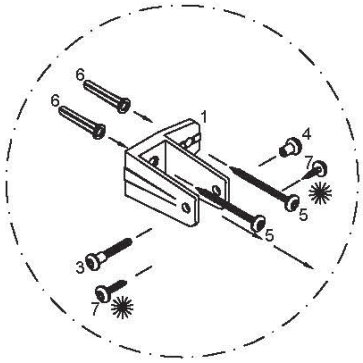

FIGURE A

✹ OPTIONAL
Two Vandal Resistant 5/8" Screws
May Be Used (But Not Recommended)
To Fasten Brackets To Panel.

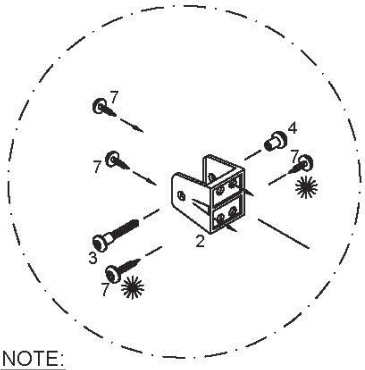

NOTE:
Use Only Vandal Resistant 5/8" Screws
To Diagonally Fasten U-bracket To Pilaster.

FIGURE B

CEILING HUNG PILASTER/WALL ASSEMBLY PLASTIC LAMINATE

Pilasters must be both plumb and level.

A. Fasten pilaster to wall bracket using through bolts or sheet metal screws.

B. Establish door openings by adjusting pilaster mounting bar to desired positions & tighten nuts. Refer to step 6.

Pilaster/Wall Hardware Kit (P/N 8515210) Includes: CHROME PLATED ZAMAC			
Pilaster/Wall Hardware Kit (P/N 8265211) Includes: STAINLESS STEEL			
PART ID.		DESCRIPTION	QTY
1		One Ear Wall Bracket	(2)
2		Vandal Resistant Step Bolts 1 1/4" Long	(2)
3		Vandal Resistant Barrel Nut	(2)
4		Vandal Resistant 2 1/2" S.M.S	(4)
5		Plastic Shields	(4)
6		Vandal Resistant 5/8" S.M.S	(4)

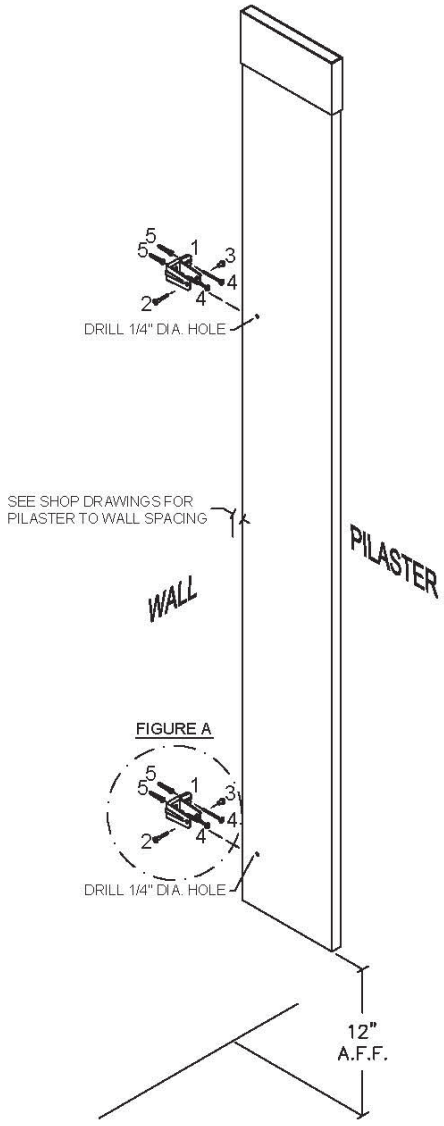

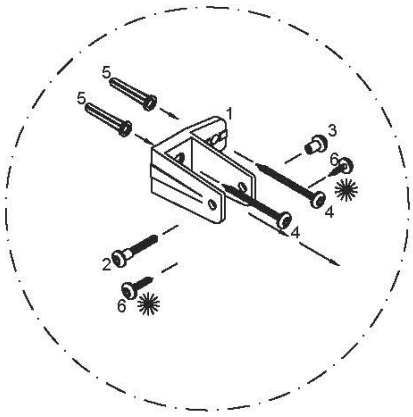

FIGURE A

✹ OPTIONAL
Two #3914120 Theft resistant C/P #14 X 5/8"
May be Used (But Not Recommended)
To Fasten brackets To Panel.

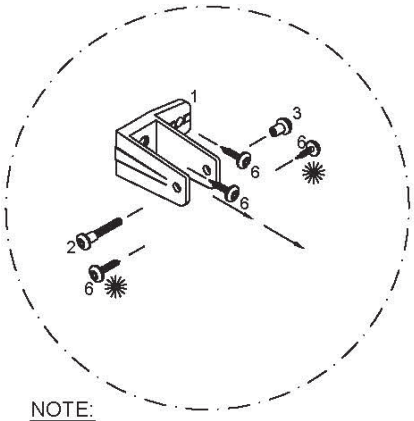

NOTE:
Replace #3910450 Theft Resistant C/P #14 x 2 1/2"
With #3914120 Theft resistant C/P #14 X 5/8"
To Fasten Pilaster To Panel.

FIGURE B

CEILING HUNG
PILASTER/PANEL ALCOVE ASSEMBLY
PLASTIC LAMINATE

Note:
Replace P/N#8515010 with P/N#8515020
for two ear locations.
Combine with Pilaster to Wall kit #8515210

Panel Hardware Kit (P/N 8515010) Includes: CHROME PLATED ZAMAC Panel Hardware Kit (P/N 8265011) Includes: STAINLESS STEEL			
PART ID.		DESCRIPTION	QTY
1		One Ear Bracket	(2)
2		"U" Bracket	(2)
3		Vandal Resistant C/P Step Bolts 1" Long	(4)
4		Vandal Resistant C/P Barrel Nut	(4)
5		Vandal Resistant 2 1/2" S.M.S	(4)
6			(4)
7		Vandal Resistant 5/8" S.M.S	(12)

FIGURE A

NOTE:
Replace Vandal Resistant 2 1/2" screws
With Vandal resistant 5-8"screws
To Fasten Pilaster To Panel.

STEP 1
LAYOUT
FLOOR ANCHORED/CEILING ANCHORED

NOTE: FLOOR MUST BE CONCRETE.

A. Review the layout drawings and package lists that have accompanied this job.

B. Before proceeding, confirm that backing of wall and ceiling support is adequate to secure mounting of toilet compartment units.

C. Establish and mark pilaster center line from back wall.

D. Establish and mark panel center lines for wall brackets.

E. Establish pilaster floor and ceiling fastener locations from side wall according to shop drawings. (Note fasteners are located 1" from edge of pilaster.)

F. Mark wall bracket holes using brackets as templates.

FIGURE 1

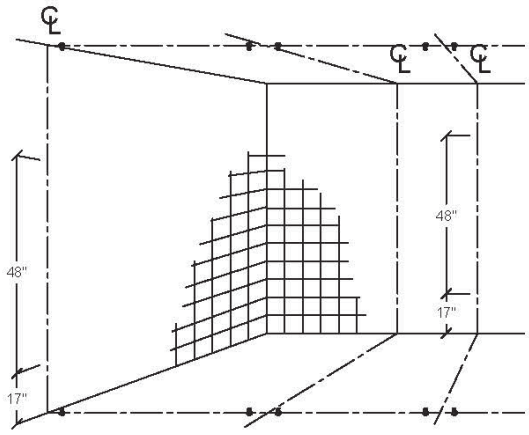

STEP 2
WALL BRACKETS AND FLOOR BRACKETS

A. Drill holes for wall brackets and floor fastenings of appropriate size for particular fastening devices supplied. Typically, 1/4" bits can be used throughout. A wide variety of bit sizes are recommended as site conditions and hardware combinations vary.

B. Insert anchoring devices in walls and secure wall brackets.

C. Install wedge anchor with shoe clip, washer and nut into concrete floor and tighten.

FIGURE 2

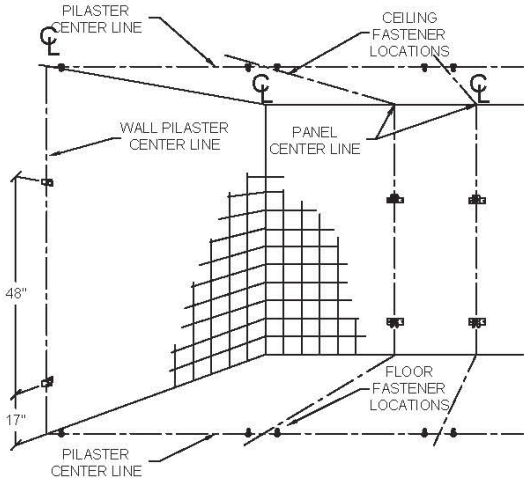

STEP 3
POSITION PANEL

A. Place panel on a support, 12" above the floor.

B. Set it into wall brackets,but do not fasten panel at this time.

FIGURE 3

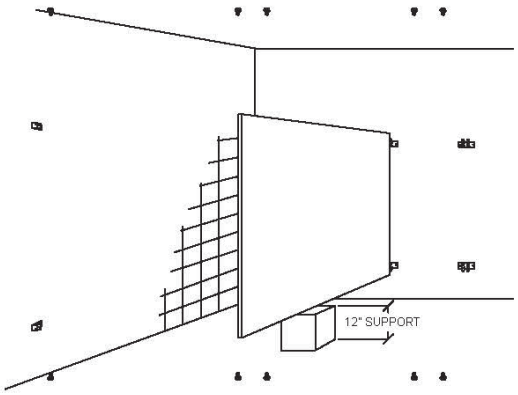

STEP 4
PILASTER PREPARATION

A. Align U-brackets in position on rear of pilasters.Refer to layout drawings.

B. Fasten U-brackets to pilaster with sheet metal screws.

C. Pilasters at wall do not require U-brackets,but should be prepared for wall and floor fastening as required by compartment layout.

FIGURE 4

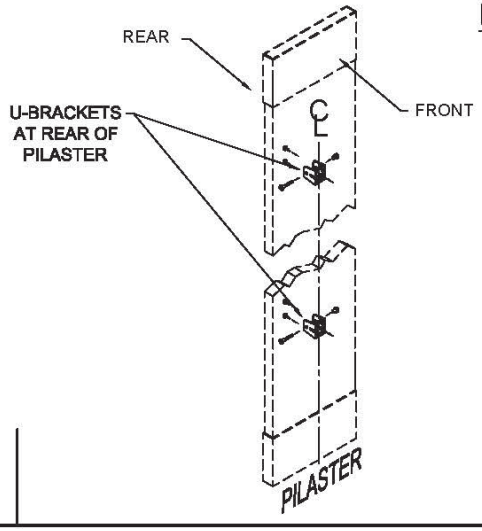

STEP 5
INSTALL PILASTERS

NOTE:STRUCTURAL STEEL BY OTHERS

A. Thread support nut and mounting washers over threaded rods to support pilaster mounting bar.

B. At the floor position pilaster and mounting bar on wedge anchors and attach lightly with square flat washer,lockwasher and locking nut.

FIGURE 5

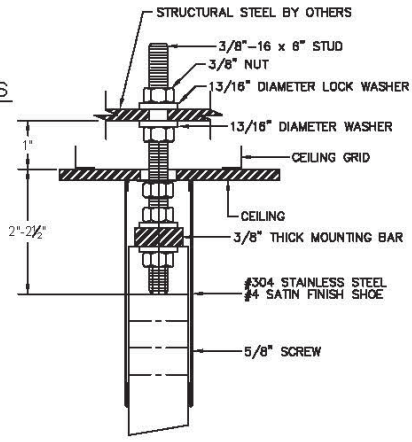

CEILING BOLT MOUNTING DETAIL
PLASTIC PILASTERS

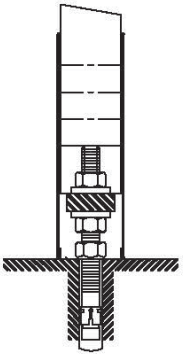

FLOOR MOUNTING DETAIL

STEP 6
SECURING PILASTERS TO PANELS

A. Level each pilaster by adjusting both support nuts to desired position.

B. Plumb each pilaster and fasten the pilaster to panel using through bolts or sheet metal screws.

C. Establish door openings by setting pilaster mounting bar to desired position on stud.

D. Tighten locking nuts on top of pilaster mounting bar.

E. Slide stainless steel shoe up to ceiling and down to floor level and screw into place.

F. Fasten panel to wall brackets using through bolts.

G.Remove panel support device.

FIGURE 6

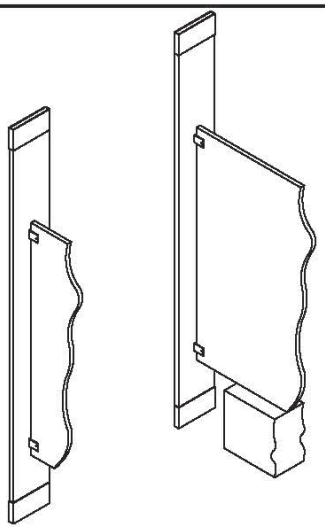

FLOOR AND CEILING ANCHORED
PANEL TO PILASTER/WALL
TWO EAR ASSEMBLY
PLASTIC LAMINATE

Pilasters must be both plumb and level.
Refer to steps 4 & 6.

A. Plumb panel and fasten panel to 2 ear bracket at wall with through bolts.

B. Plumb pilaster and fasten pilaster to panel using through bolts or sheet metal screws to "U" brackets.

Panel Hardware Kit (P/N 8515020) Includes: CHROME PLATED ZAMAC			
Panel Hardware Kit (P/N 8265021) Includes: STAINLESS STEEL			
PART ID.		DESCRIPTION	QTY
1		Two Ear Bracket	(2)
2		"U" Bracket	(2)
3		Vandal Resistant Step Bolts 1" Long	(4)
4		Vandal Resistant Barrel Nut	(4)
5		Vandal Resistant 2 1/2" S.M.S	(4)
6		Plastic Shields	(4)
7		Vandal Resistant 5/8" S.M.S	(4)

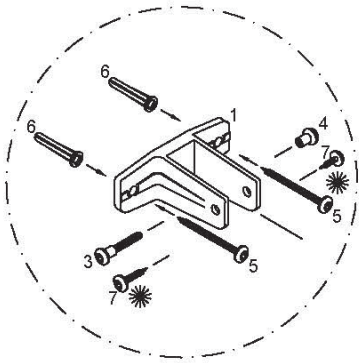

FIGURE A

✹ OPTIONAL
Two #3914120 Theft resistant C/P #14 X 5/8"
May be Used (But Not Recommended)
To Fasten brackets To Panel.

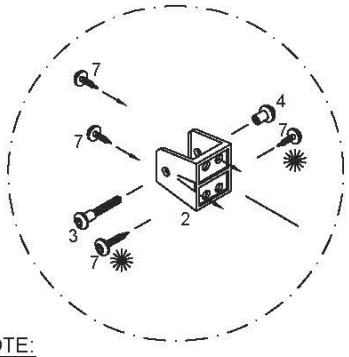

NOTE:
Use Only Two #3914120
Theft resistant C/P #14 X 5/8"
To Diagonally Fasten U-bracket To Pilaster.

FIGURE B

FLOOR AND CEILING ANCHORED PILASTER/WALL ASSEMBLY PLASTIC LAMINATE

Pilasters must be both plumb and level.

A. Fasten pilaster to wall bracket using through bolts or sheet metal screws.

B. Establish door openings by adjusting pilaster mounting bar to desired positions & tighten nuts. Refer to step 6.

Pilaster/Wall Hardware Kit (P/N 8515210) Includes: CHROME PLATED ZAMAC			
Pilaster/Wall Hardware Kit (P/N 8265211) Includes: STAINLESS STEEL			
PART ID.		DESCRIPTION	QTY
1		One Ear Wall Bracket	(2)
2		Vandal Resistant Step Bolts 1 1/4" Long	(2)
3		Vandal Resistant Barrel Nut	(2)
4		Vandal Resistant 2 1/2" S.M.S	(4)
5		Plastic Shields	(4)
6		Vandal Resistant 5/8" S.M.S	(4)

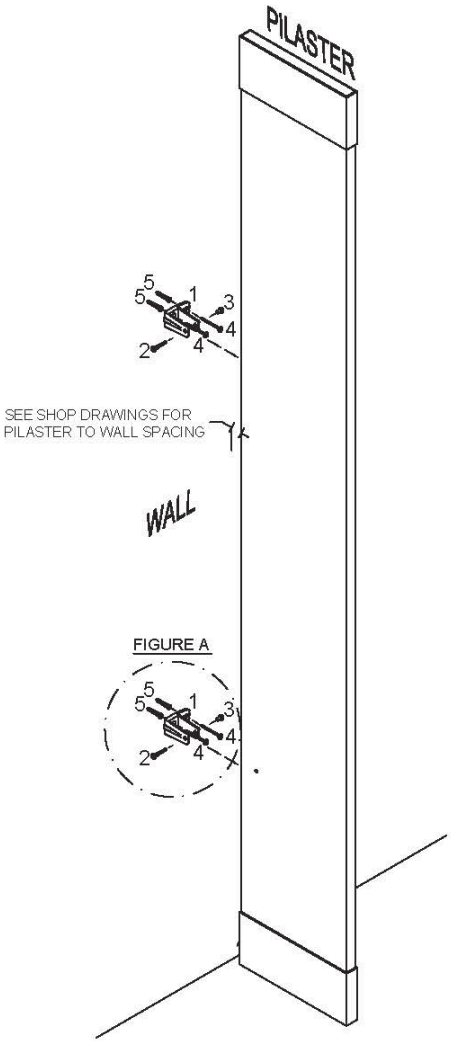

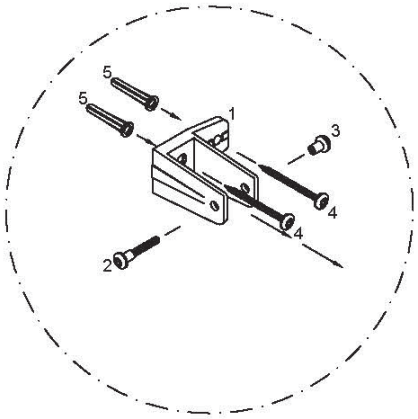

FIGURE A

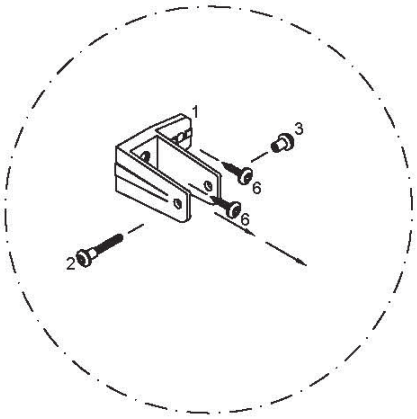

NOTE:
Replace Vandal Resistant 2 1/2"
With Vandal Resistant 5/8"
To Fasten Pilaster To Panel.

FIGURE B

FLOOR AND CEILING ANCHORED PILASTER/PANEL ALCOVE ASSEMBLY PLASTIC LAMINATE

Replace #8517310 with #8517320 for two ear bracket kit.

Alcove Hardware Kit (P/N 8517310) Includes: CHROME PLATED ZAMAC Alcove Hardware Kit (P/N 8267311) Includes: STAINLESS STEEL			
PART ID.		DESCRIPTION	QTY
1	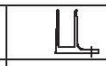	1 1/4" One Ear Wall Bracket	(2)
2		Vandal Resistant Step Bolts1 1/4" Long	(2)
3		Vandal Resistant Barrel Nut	(4)
4		Vandal Resistant 2 1/2" S.M.S	(10)
5		Plastic Shields	(10)
6		Vandal Resistant 5/8" S.M.S (Balance For Fasting Pilaster /Panel)	(14)
7		Alcove Clip	(2)
8		1" One Ear Wall Bracket	(2)
9		Vandal Resistant 1" S.M.S	(4)
10		Vandal Resistant C/P Step Bolts 1" Long	(2)
11		Bracket Headrail Satin "F" Zamac (NOT NEEDED)	(1)

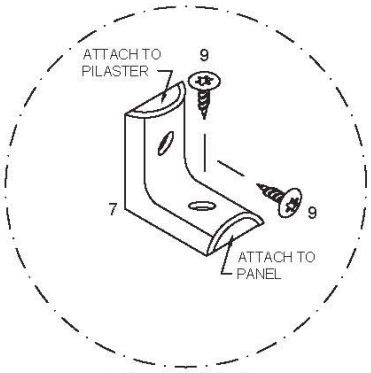

FIGURE A

FLOOR AND CEILING ANCHORED
PILASTER/PANEL/PILASTER INLINE ASSEMBLY
PLASTIC LAMINATE

Alternate Alcove Hardware Kit (P/N 8517030) Includes: CHROME PLATED ZAMAC			
PART ID.		DESCRIPTION	QTY
1		Alcove Clips	(12)
2		Vandal Resistant Step Bolts 1" Long	(12)
3		Vandal Resistant Barrel Nut	(12)
4		VandalResistant 5/8" S.M.S	(24)

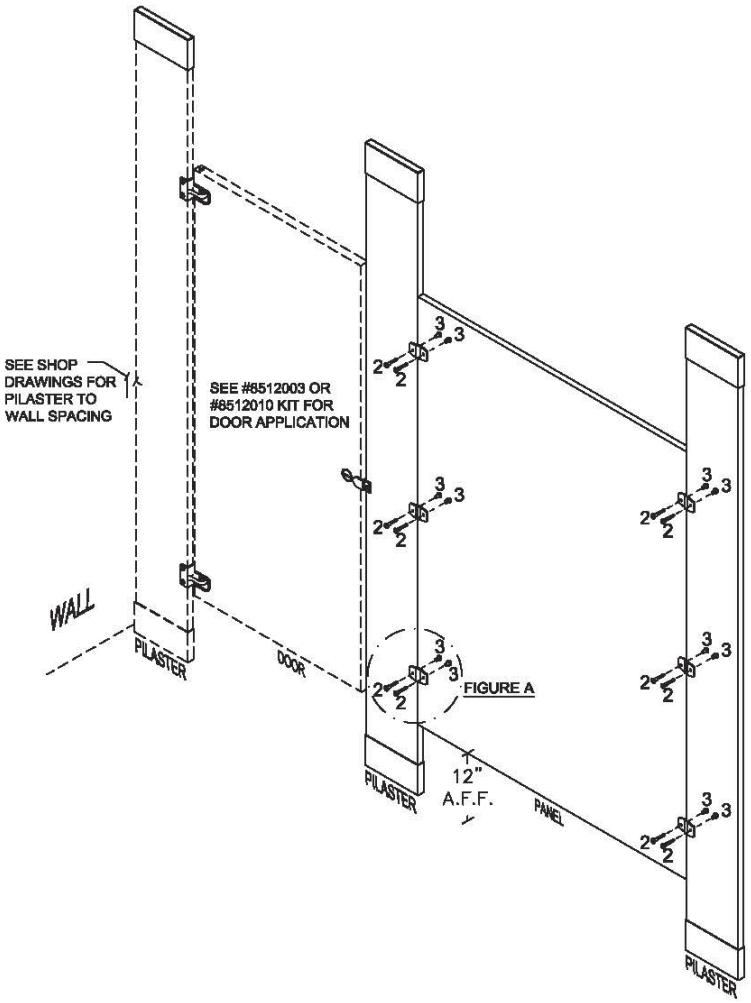

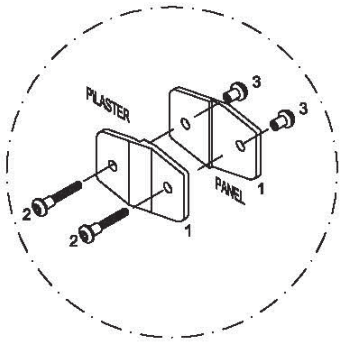

FIGURE A
RECOMMENDED

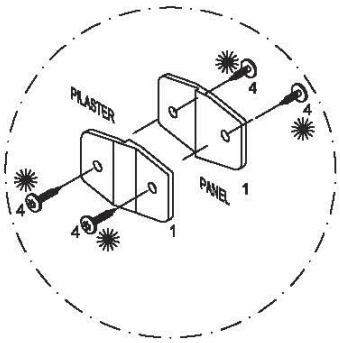

OPTIONAL

✹ Two Vandal Resistant 5/8"SMS May be Used (But Not Recommended) To Fasten brackets To Panel. Offset brackets for screw clearance.

FLOOR ANCHORED/OVERHEAD BRACED CONTINUOUS PILASTER/PANEL ALCOVE ASSEMBLY

NOTE: The tops of all pilasters must be level with one another prior to securing the pilaster to the panel.

A. Level the panel and adjust the gap at the end nearest to the wall.
B. Drill 1/4" holes using bracket as a template.
C. Secure the panel to the wall using through bolts.
D. Plumb the pilaster to the nearest edge of the panel.
E. Secure the pilaster to the panel using Flat or the "H" brackets and fasten with through bolts.
F. See appropriate door hardware page for pilaster to door connection.
G. Remove panel support device.

CONTINUOUS BRACKETS ALCOVE CONNECTION		
PART ID.	DESCRIPTION	QTY
	"U" BRACKET	(2)
	VANDAL RESISTANT STEP BOLTS 1" LONG	(16)
	VANDAL RESISTANT BARREL NUT	(16)
	VANDAL RESISTANT 2 1/2" S.M.S	(8)
	PLASTIC SHIELDS	(8)

	"H" BRACKET	(1)
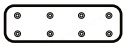	FLAT ALCOVE BRACKET	(2)

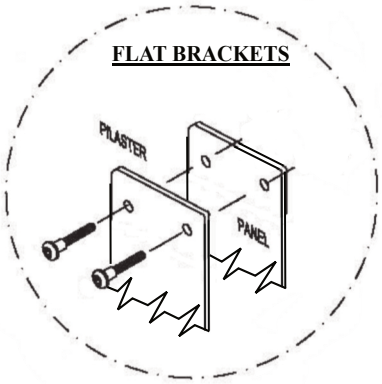

FIGURE A

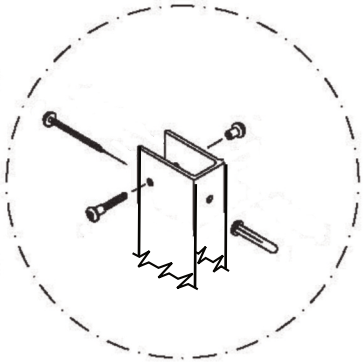

FIGURE B

PIANO HINGE ASSEMBLY

PLASTIC LAMINATE INSTALLATION

DOOR HARDWARE
ASSEMBLY-PIANO HINGE
NOTE

IF CAMMED HINGE IS PROVIDED.
ADA DOORS WILL RECEIVE “0” DEGREE HINGE.
STANDARD DOORS RECEIVE “15” DEGREE HINGE.

- OUTSWING DOOR HINGE FASTENED TO OUTSIDE FACE.

NOTE: A 1/4” DRILL BIT WILL NEED TO BE USED TO DRILL THE REQUIRED HOLES.

Outswing Door Hardware Kit Includes:		
PART ID.	**DESCRIPTION**	**QTY**
	Spring-Loaded Piano Hinge	(1)
	**Indicator Side Latch**	(1)
	**Coat hook & Bumper**	(1)
	**Bumper**	(1)
	**Pull Handle**	(2)
	**Slide Latch Keeper**	(1)
	**Vandal Resistant Step Bolts #10-24 X 3/4"**	(12)
	**Vandal Resistant Barrel Nut #10 X 5/8”**	(12)
	**Vandal Resistant 5/8”**	(4)
	**BOLT STEP SS #10 X 15/16T-27 PIN HD TORX**	(5)
	**BOLT STEP SS #10 X 1 3/16” T-27 PIN HD TORX**	(4)
	**Vandal Resistant 5/8”**	(3)

PLASTIC LAMINATE INSTALLATION

DOOR HARDWARE
ASSEMBLY-PIANO HINGE
NOTE

IF CAMMED HINGE IS PROVIDED.
ADA DOORS WILL RECEIVE “0” DEGREE HINGE.
STANDARD DOORS RECEIVE “15” DEGREE HINGE.

- INSWING DOOR HINGE FASTENED TO INSIDE FACE.

NOTE: A 1/4” DRILL BIT WILL NEED TO BE USED TO DRILL THE REQUIRED HOLES.

Inswing Door Hardware Kit Includes:		
PART ID.	**DESCRIPTION**	**QTY**
	Indicator Side Latch	(1)
	Slide Latch Keeper	(1)
	Vandal Resistant Step 1 1/4”	(8)
	Bumper and Coathook	(1)
	Vandal Resistant Step Bolts #10-24 X 3/4"	(12)
	Vandal Resistant Barrel Nut #10 X 5/8”	(12)
	Spring-Loaded Piano Hinge	(1)
	Vandal Resistant 5/8”	(4)
	BOLT STEP SS #10 X 15/16T-27 PIN HD TORX	(2)
	NUT BARREL SS #10 X 5/8 T-27 PIN HD TORX	(2)
	BOLT STEP SS #10 X 1 3/16” T-27 PIN HD TORX	(2)
	BOLT STEP SS #10 X 1 5/16 “T-27 PIN HD TORX	(2)

PLASTIC LAMINATE INSTALLATION

PILASTER/WALL "U" BRACKET

HARDWARE LIST		
PICTURE	DESCRIPTION	QTY
	2 1/2" WALL SCREW	4
	RED PLASTIC SHIELD	4
	"U" BRACKET	1
	1/2" NUT	4
	1/2" BOLT	4

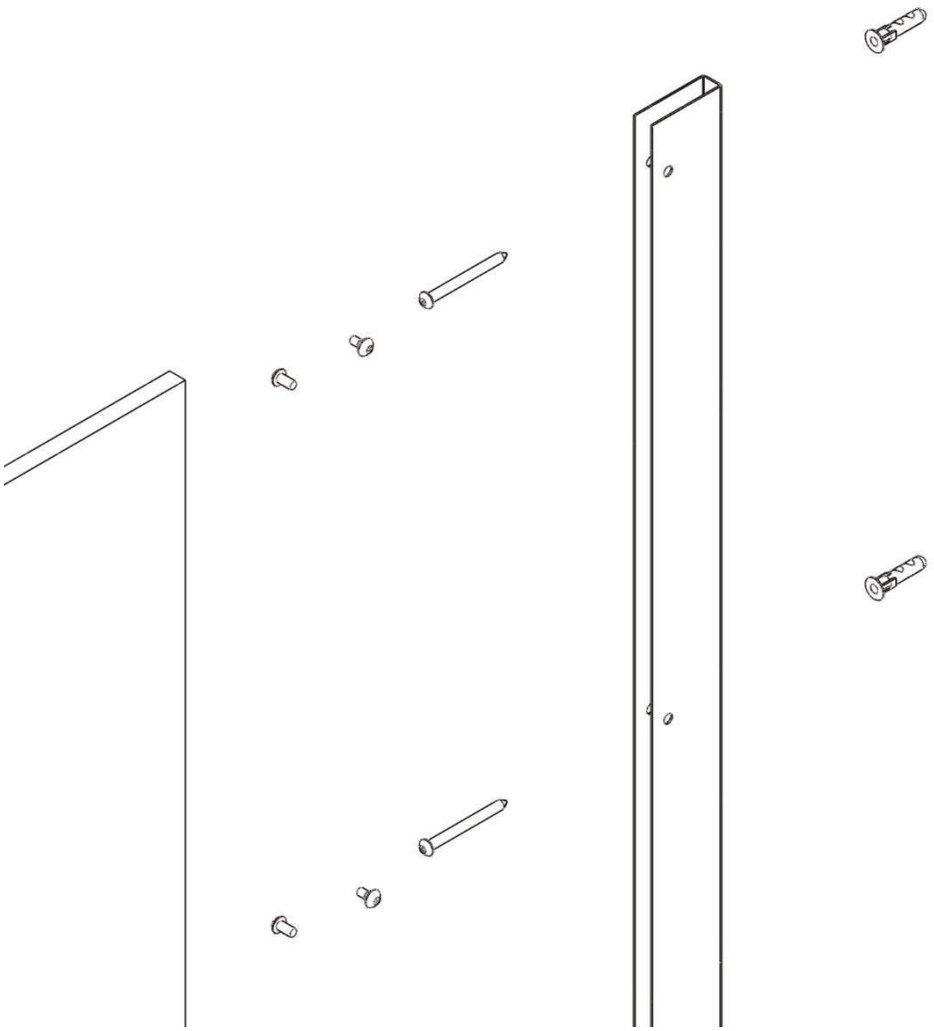

PLASTIC LAMINATE INSTALLATION

PANEL TO PILASTER/ WALL

ALUMINUM PANEL HARDWARE KIT		
PART ID	DESCRIPTION	QTY
	"U" Bracket	(2)
	Vandal Resistant Step Bolts 1/2" Long	(8)
	Vandal Resistant Barrel Nut 3/8"	(8)
	Vandal Resistant 2 1/2" S.M.S	(4)
	PLASTIC SHIELDS	(4)
	Vandal Resistant 5/8" S.M.S	(4)

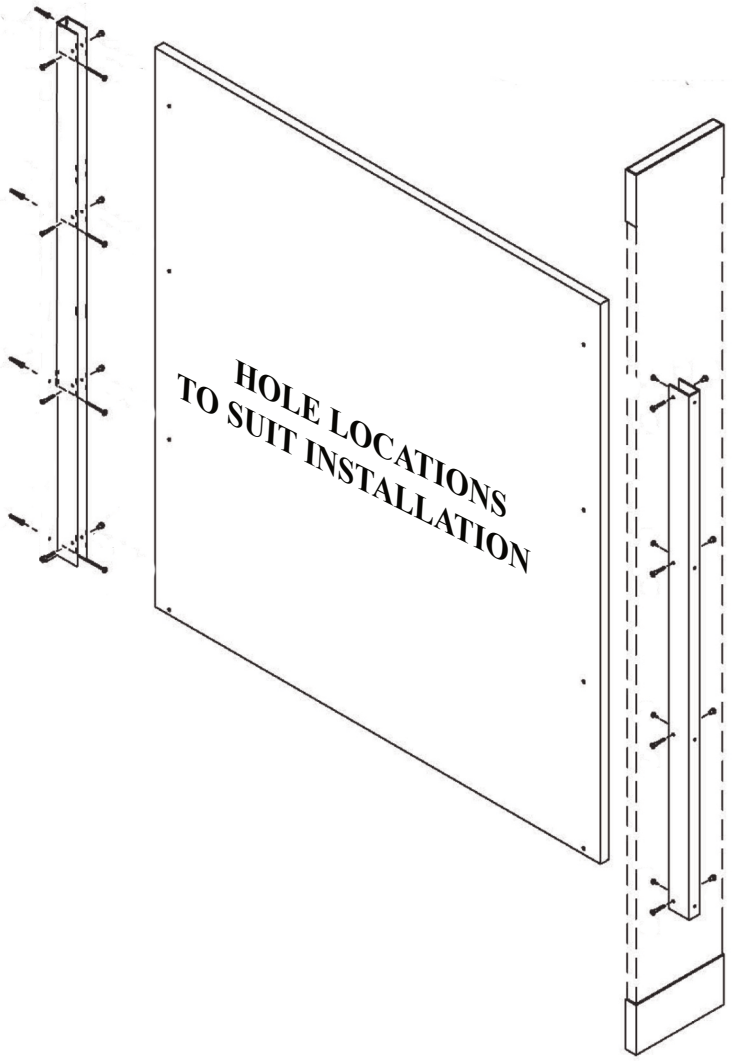

CARE AND MAINTENANCE OF TOILET PARTITIONS

In order to provide toilet partitions with the care and maintenance, the following instructions must be followed.

A. All surfaces must be kept clean with water and mild soap solution only.

B. In high humidity areas, the rooms must be properly ventilated.

C. “Hosing down” or wet washing of these units may cause water absorption and damage

D. For maximum protection, periodic applicaton of any standard furniture wax will be beneficial.

E. In order to provide toilet partitions with the proper care and maintenance, the above instructions must be followed.

WARNING

Under no circumstances should the components be subjected to:
* Abrasive powders or pads
*Water closet cleaners
*Ceramic tile cleaners
*Solutions containing more than 1% by volume of ammonia
*Solutions containing acids or lye
*Solutions containing enzymes

Attention to work progress during new construction or renovation is important.
Other trades and cleaning services may use agents for ceramics and tiles that will damage these components.