MATERIAL SELECTION AND MEASURING GUIDE

ASI Global Partitions offers the widest range of toilet partitions in the industry for virtually any application. To simplify the selection process, this reference sheet outlines available material types, required hardware, and provides a guide for proper toilet compartment measurements.



Powder Coated steel partitions (electrostatically applied) provide high-tech quality at an economical price.

- Highly scratch resistant
- Easy to clean

Warranty 3 years*



Stainless Steel Partitions' elegance complement any design style in the washroom.

- Satin finish allow for easy maintenance
- Textured finish for increased vandal resistance

Warranty 5 years*



Solid Plastic (HDPE) toilet partitions are ideal for high-traffic areas.

- Water resistant
- Never need painting
- Will not easily dent or chip

Warranty 25 years*

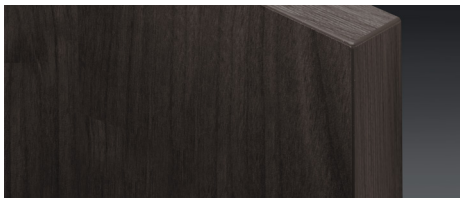

Plastic Laminate Partitions pleasantly eliminate any unsightly black lines that appear in standard Plastic Laminate.

- The "Moisture Guard Edge Banding™" is 3 times more resistant to moisture

Warranty 5 years*



Phenolic Black Core partitions hold up in high vandalism areas as well as under severe moisture conditions.

Warranty 25 years*



Phenolic Color-Thru™ partitions live up to their name, with surface color through and through.

- Impact-, graffiti-, and scratch resistant
- Excellent screw holding power

Warranty 25 years*

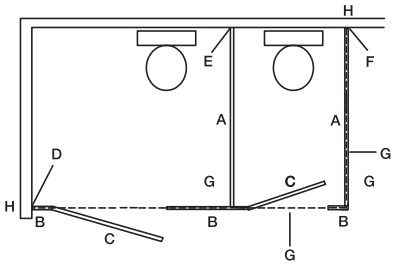

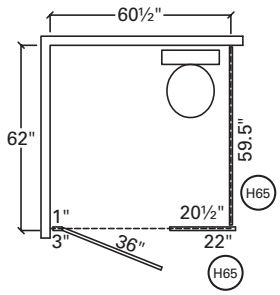

Partition Component Reference Guide

A - PANEL Choose an overall depth and subtract 2.5" to allow for pilaster and hardware gaps.

B - PILASTERS Support the panels and are needed to hang and latch doors.

C - DOORS 24" are used for compartments 32" to 40" wide; 36" are used for handicap compartments.

D - ONE EAR PILASTER BRACKET Required when a pilaster is fastened to a wall or perpendicular to another pilaster.

E - TWO EAR PANEL BRACKET or "T" bracket is used on all but the end panel.

F - ONE EAR PANEL BRACKET or "F" bracket is generally used on end panels to avoid seeing signs of mounting.

G - U BRACKET Perpendicular panel to pilaster mounting

H - HEADRAIL Runs across the top of the pilasters above panels and doors.

I - HEADRAIL RETURN KIT Fastens headrail to wall and each other.

ADA-Compliant Minimum Dimensions

Typical Hardware Requirements:

- Pilaster-to-wall brackets
- Panel-to-wall brackets
- Panel-to-pilaster brackets
- Door hinge & ADA latch
- Reinforced panel for grab bar attachment
- Coat hook & bumper
- Outswing bumper
- Headrail & mounting bracket

(H##) Denotes headrail length in inches

MEASURING FOR A TOILET COMPARTMENT LAYOUT

Getting Started

- The first thing is to sketch out the walls. Wall lines should be indicated using a double line as seen in the drawings below.
- Once the walls have been sketched out, determine the toilet locations (T) and center lines. If this is a replacement order you may skip this step and measure the existing components unless you need to update the layout to meet ADA requirements.
- Now that the toilet locations have been determined, you will be able to sketch out your components.

1 **Compartment depth dimension**
Measure from the back wall of the compartment to the outside face of the pilaster. Compartments less than 54" will require out-swing doors.

2 **Wall-to-panel/panel-to-panel centerline dimension**
Handicapped compartments need to be 60" wide x 59" deep clear (inside compartment measurement). The centerline of toilet location in a handicap compartment must be 18" from one side of the compartment. Continue PANEL placement by roughly centering the toilet inside each compartment.

3 **Wall-to-wall dimension**
When measuring the distance between walls it is important to find the tightest measurement. This includes measuring between half-wall tile, wainscoting and base molding. Hardware brackets can accommodate gaps of 1/2" to 1 1/4". Standard gap at the wall is 1".

4 **Component measurements**
Layout begins from the side wall. Start with the first hardware gap (1"), then your first PILASTER. If it is an ADA compartment the door opening must be diagonal from the toilet. Federal law requires a door opening within 4" (3" PILASTER with a 1" gap) off the wall or panel depending upon toilet location. Your next dimension will be DOOR OPENING (PILASTER-TO-PILASTER). If this is a handicap compartment, a 36" door is required. Continue measuring in this fashion, trying to center the door in the standard compartments.

NOTES: Headrail will run across the top of the pilasters above panels and doors. In Corner Layout corner pilaster must be a minimum of 6" wide for anchoring

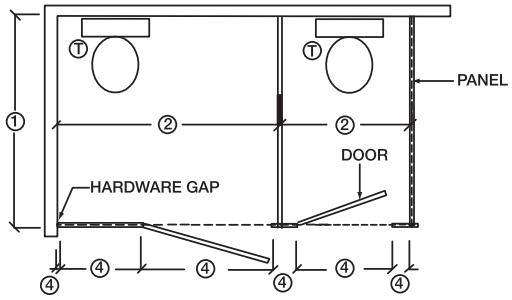

Measuring for an "IN CORNER" Layout

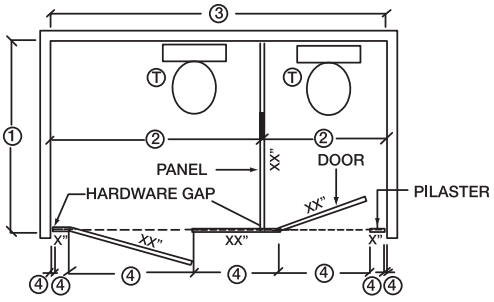

Measuring for a "BETWEEN WALL" Layout

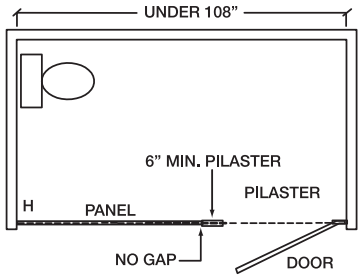

Measuring for a "IN-LINE ALCOVE" Layout

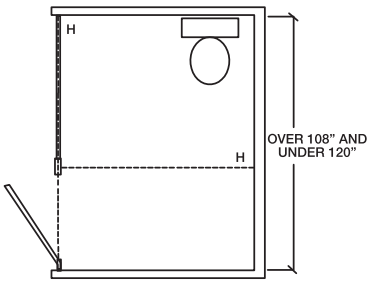

Alcoves over 108" and under 120" can be run straight across but with headrail "kicker" run from the middle pilaster perpendicular to wall.

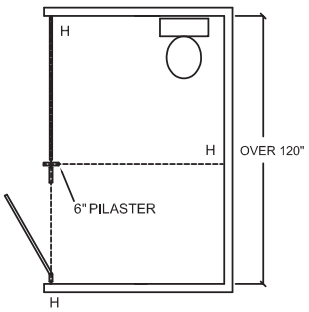

Alcoves over 120" must be "T"-ed off, meaning that a pilaster must be turned perpendicular to the middle pilaster. It will also require Headrail from perpendicular pilaster to wall.

ASI Group
Integrated Building Products

©2026 ASI Global Partitions, an ASI Group Company

ASI Global Partitions
900 Clary Connector, Eastanollee, GA 30538
Tel: 706.827.2700
Web: asi-globalpartitions.com